MR 509
Permit No. 24-17819-06

Office Use Only
County or Jurisdiction FRA
Rte SR317
Log Pt 1.51-2.15
Acc Cat

State of Ohio
Department of Transportation
Permit

[1] Subject to all terms, conditions, and restrictions printed, written below and on the reverse side hereof, or attached,

Name: Everstream
Address: 240 North 5th Street, Suite 168 Columbus OH 43215
Company Phone: 380-209-5936

is hereby granted a permit under Section 5515.01 and 5515.02 of Ohio Revised Code, and permission to perform work necessary in the manner described and at the location indicated in the following or attached to this permit.

Utility - (see attached sheets)

Description of Work: Starting at an existing HH located on the SOUTH side of SR 317, approx. 2050' easterly from the SE corner of the intersection of Lockbourne Rd. and SR 317, begin bore westerly approx. 215' along the SOUTH side of SR 317. Then continue bore northerly across SR 317 approx. 215' to an existing HH.

[2] This permit shall be in the possession of employees /agents of permittee on site at all times who are in charge of the work and shall be shown, upon request, to any employee of the Department of Transportation.

Contact ODOT Representative 3 days before work begins, also contact ODOT Representative when work is completed for final inspection.
Failure to notify the ODOT Representative could result in work stoppage!

[3] No work authorized by this permit shall begin until the permittee has contacted and received instructions from
ODOT Representative
Phone Bob Wilson 614-231-2331
Email Address:
(Authorized ODOT Employee)

NOTE: Any work performed by the permittee may be stopped if this requirement is not met.

[4] Prior to any excavation in the highway right-of-way, the Ohio811, https://www.oups.org/excavators, must be contacted in accordance with ORC Section 3781.25 to 3781.32. Ohio811 can be reached at 1-800-362-2764 or 811.

[5] If your utility is above ground in any way, you must mark your utility with a fluorescent colored marker that corresponds with the universal OUPS color code. The marker must be no shorter than six feet in height and you must maintain the marker. Guide wires must be marked a fluorescent yellow. Failure to mark as described, will result in the Department of Transportation being held harmless and no reimbursement for damage to your property.

[6] All work requiring persons or vehicles within ODOT right of way shall comply with all applicable requirements of the Ohio Manual of Uniform Traffic Control Devices and Item 614 (Maintaining Traffic) of the Construction and Material Specifications, latest editions. Failure to comply with these requirements will be cause for immediate revocation or suspension of the permit until the proper traffic control devices have been provided.

[7] The permittee accepts the conditions, terms, and requirements printed, written on, or attached to this permit and understands that failure to comply fully with those conditions, terms, and requirements or any change in the use of the permit inconsistent with its terms and conditions will be considered a violation and cause for suspension, revocation, or annulment of the permit thereby rendering the permit illegal and subject to appropriate Department action, up to an including removal of the installation at the permittee's expense.

[8] Performance Bond Required? _____ Yes __x____ No Company_____
Effective Date _____ Expiration Date _____Amount $ _____

[9] This permit shall be void if the work described herein does not comply with the conditions, terms, and requirements applicable to this permit, and if the work is not completed by 12/19/2024

(the remainder of this page is left blank intentionally)

General Provisions Applicable to All Permits
(Sections 5515.01 and 5515.02 of O.R.C.)

[1] This permit is not a substitute for satisfying the rights or obligations of any other party who may have an interest in the underlying fee interest.

[2] The granting of this permit does not convey to the permittee or to the property served any rights, title, or interest in state highway rights of way or in the design or operation of the state highway; or in any way abridge the right of the Director of the Department of Transportation in his jurisdiction over state highways. If, in the process of any future work or for the benefit of the traveling public, it becomes necessary, in the opinion of the Director of Transportation to order the removal, reconstruction, relocation, or repair of any of the fixtures, or work performed under this permit, said removal, reconstruction, relocation, or repair shall be wholly at the expense of the owners thereof or the permittee and be made as directed by the Director of Transportation and within the time determined by the Director. Such changes in the state highway design or operation, necessary for improved safety and operation or for the benefit of the traveling public, shall not require a permit modification since the permit confers no private rights to the permittee over the control of t he state highway.

[3] The District Deputy Director acts for and on behalf of the Director in issuing and carrying out the provisions of all permits. The District Deputy Director has full authority to ensure that all provisions of the permit are met and to reject any materials, design, and workmanship that do not meet applicable Department standards. The District Deputy Director, at his/her discretion, may require a performance bond or certified check as a prerequisite to the issuance of a permit.

[4] Failure on the part of the permittee to comply fully with the provisions and conditions of the permit will be cause for suspension, revocation, or annulment of the permit thereby rendering the permit illegal and subject to appropriate Departmental action. By accepting the permit, the permittee agrees to comply with all conditions, terms, and restrictions printed or written on or attached to the permit. If the permittee or its agent performs any work contrary to the conditions of the permit or to the instructions of the District Deputy Director and, after due notice, fails to correct the problem, the Department of Transportation may, with or without notice, correct or remove such work and the permittee shall reimburse the Department for the costs and shall hold the Department harmless for all results of such work.

[5] The permittee shall indemnify and hold harmless the State of Ohio, Department of Transportation, its officers, representatives and assigns, from any and all loss, liability, damages, litigation costs, and claims for injury or death to any person, property, or business caused by or resulting from any act, omission, event, consequence, or occurrence, negligent or otherwise of the permittee, its employees, agents, or assigns as a result of the issuance of this permit.

[6] All work authorized under the permit shall be performed to the Department's satisfaction, and the entire expense shall be borne by the permittee. No work shall be performed until the permittee has contacted the Department's appointed representative named on the permit and received instructions. The Department's representative may inspect all work covered by the permit, or the Department reserves the right, during the time any or all of the work is being performed, to appoint an inspector over the work who shall represent the interest of the State on the work and any compensation arranged for shall be paid wholly by the permit holder. Work not in compliance shall be halted and the District Deputy Director shall be notified of the cause. The permittee shall be notified of the Department's determination and given an opportunity to correct the problem. If the problem is not corrected timely or to the satisfaction of the Department, this permit will be revoked.

[7] Failure to complete all work within the time specified on the permit shall void the permit, thereby making the permit illegal and subject to appropriate Departmental action. The permittee may request an extension in writing from the District Office, explaining why the extension is necessary and when the work is expected to be completed.

[8] All work infringing on the pavement or shoulders shall comply with applicable standards and requirements regarding traffic control devices. Failure to comply will be cause for revocation or suspension of the permit. Any closure of lanes or shoulders shall be described in terms of location, duration, time of day, etc. Such work shall not begin until all traffic control devices are in place.

[9] If any grading, sidewalk, or other work allowed by a permit interferes with the drainage of the highway in any way, such catch basins and outlets as necessary shall be constructed to take proper care of said drainage and any materials such as pipes and tiles damaged during any installation or repair by the permittee or its employees or agents shall be repaired immediately at the sole cost of the permittee . Permittee shall timely notify the Department of any such damage and repairs thereto. Failure of the permittee to immediately repair the damage after it is discovered shall result in the Department performing the repair and the permittee shall reimburse the Department for the costs and shall hold the Department harmless for all the results of such work which may include removal of the permittee's facilities.

[10] Any damage to ODOT or another's property caused by the work shall be repaired by the permittee or permittee's agent or contractor in a timely manner and at the sole cost of permittee. If any emergency repairs to ODOT property are needed that cannot be performed by the permittee or permittee's agent or contractor, ODOT shall cause the repairs to be performed at the sole cost of permittee.

[11] Upon completion of the work, the permittee shall leave the highway clean of all rubbish, excess materials, temporary structures and equipment, and all parts of the highway shall be left in a condition acceptable to the Department. Upon satisfactory completion of the work authorized by the permit, the Department's appointed representative shall complete the Permit Inspection Certificate, Form No. MR 678 certifying that the permittee has complied with the terms of the permit.

[12] Except as herein authorized, no excavation shall be made or obstacle placed within the limits of the highway so as to interfere with the travel over the road.

[13] All pole lines are to be built in accordance with Rule 4901:3-1-08 of Ohio Administrative Code promulgated and enforced by the Public Utilities Commission of Ohio.

[14] All underground utilities shall be installed at a depth and horizontal distance from the road surface and any appurtenances in accordance with state and national safety standards and as pre-approved by the Department. After installation, the exact location of the utility shall be provided to the Department. The Department shall be held harmless for any damage to utilities due to insufficient or inaccurate installation or identification and all repairs shall be at the sole cost of the permittee.

[15] The permittee shall comply with the Air Pollution requirements of Rule 3745-17-08 of the Ohio Administrative Code promulgated and enforced by the Ohio Environmental Protection Agency.

[16] The permittee certifies that he or she is fully authorized to sign this permit. This permit shall apply to and be binding upon the permittee and any successors in interest. No change in ownership of the underlying property or of the facility owned by permittee shall in any way alter the permittee's obligations under this permit.

[17] The permittee(s) for herself/himself/themselves/itself, her/his/their/its personal representatives, and her/his/their/its successors in interest and assigns, as a part of the consideration hereof, do/does hereby covenant and agree that:

> **(1) No person on the grounds of race, color, or national origin, shall be excluded from participation in, be denied the benefits of, or be otherwise subjected to discrimination in the use of the utility/facilities/ services of the permittee.**
>
> **(2) In the construction of any improvements on, over, or under the above described property and the furnishing of services thereon, no person on the grounds of race, color, national origin, sex, age, or disability shall be excluded from the participation in, be denied the benefits of, or be otherwise subjected to discrimination.**
>
> **(3) The above described property shall be used in a manner that at all times is in compliance with all other requirements imposed by or pursuant to Title 49, Code of Federal Regulations, U.S. DOT, Subtitle A, Office of the Secretary, Part 21, Non-discrimination in Federally-assisted programs of the U.S. DOT — Effectuation of Title VI of the Civil Rights Act of 1964, and as said Regulations may be amended.**

(4) In the event that this instrument grants a lease, license, or permit and any of the above non-discrimination covenants is breached, then the State of Ohio, Department of Transportation, shall have the unfettered right to terminate the lease, license or permit and to re-enter and repossess the above-described property and hold the same as if said lease, license or permit had never been made or issued.

This permit is granted subject to the following attached conditions:

This permit is approved to do work in ODOT right of way only. At no time does this permit give you the right to trespass onto private property.

It is your responsibility to have all the proper permits and agreement to be outside of the right of way and on private property.

-There will be absolutely no plowing installation of any facilities being installed in ODOT District 06 ROW. If found in violation the permit will be revoked immediately.
-Have a valid 811 ticket with good paint marks on ground before any excavation.
-Facilities need placed as close to back of ROW as possible. Don't just take the easy route. Take the next contractor into consideration.
-Perform a thorough site investigation and pre bore walk to make sure no underground facilities are unaccounted for.
-Spot hole all facilities being crossed and visually watch the bore head/reamer pass the utilities.
-Maintain 5' of horizontal clearance if at all possible from other utilities.
-When there is less than 5' of clearance between bore path and a facility being paralleled, spot facility in conflict every 50' to verify it's path.
-Any structure being crossed 8" or larger in diameter will have a minimum of at least 2' of vertical clearance whether it be above or below said structure.
-Absolutely no skewed or diagonal road crossings without ODOT approval. Drilled road crossings will be at a 90* angle period. If you do this without ODOT permission you will abandon that bore shot and install at a proper 90* angle.

(the remainder of this page is left blank intentionally)

MAINTENANCE OF TRAFFIC PLAN
LANE CLOSURE IN THIS AREA SHALL BE AS PER CITY OF COLUMBUS SCD 1510, 1529 & 1550

BORE PITS, EARTHWORK AND TRENCHES BEYOND THE SHOULDER
BORE PITS, EARTHWORK AND TRENCHES WITHIN ODOT RIGHT-OF-WAY MUST BE OUTSIDE OF THE DITCH SECTION AND PROTECTED IN ACCORDANCE WITH ODOT'S STANDARD CONSTRUCTION DRAWING MT-101.90. "DROPOFFS IN WORK ZONES".

- A PIT/TRENCH 4 TO 12 FEET FROM THE EDGE OF TRAVELED LANE AND GREATER THAN 12 INCHES DEEP MUST HAVE DRUMS DURING THE DAY AND PCB AT NIGHT UNLESS SECURELY PLATED OR BACKFILLED TO WITHIN 12 INCHES. SEE MT-101.90 FOR ADDITIONAL INFORMATION.
- A PIT/TRENCH 12 TO 30 FEET FROM THE EDGE OF TRAVELED LANE AND GREATER THAN 24 INCHES DEEP MUST HAVE DRUMS DURING THE DAY AND PCB AT NIGHT UNLESS SECURELY PLATED OR BACKFILLED TO WITHIN 24 INCHES. SEE MT-101.90 FOR ADDITIONAL INFORMATION.

THE LENGTH OF THE TRENCH WHICH IS OPEN AT ANY ONE TIME SHALL BE HELD TO A MINIMUM AND SHALL AT ALL TIMES BE SUBJECT TO APPROVAL OF THE ENGINEER.

MUD, DIRT AND DEBRIS
THE TRACKING OR SPILLAGE OF MUD, DIRT OR DEBRIS UPON STATE HIGHWAYS IS PROHIBITED AND ANY SUCH OCCURRENCE SHALL BE CLEANED U
P IMMEDIATELY BY THE CONTRACTOR.

VEHICLE PARKING
VEHICLES ARE NOT TO BE PARKED ON THE PAVEMENT. ALL VEHICLES ARE TO BE PARKED PER CMS 614.035 - *STORAGE OF EQUIPMENT, VEHICLE AND MATERIAL ON HIGHWAY RIGHTS OF WAY.*

PERSONAL PROTECTIVE EQUIPMENT
ODOT REQUIRES ALL CONTRACTORS' PERSONNEL TO WEAR THE CORRECT PPE WHILE WITHIN ODOT RIGHT-OF-WAY. ALL VEHICLES SHALL HAVE THE CORRECT SAFETY EQUIPMENT ALSO.

PROTECTION FROM DROP OFF CONDITIONS IN THE WORK ZONE
ALL DROP-OFF CONDITIONS WITHIN THE WORK ZONE MUST BE PROTECTED IN ACCORDANCE WITH STANDARD CONSTRUCTION DRAWING MT-101.90.

GENERAL LANE CLOSURE POLICIES
TRAFFIC BACK-UPS CAUSED BY THEIR OPERATION OF OVER 0.75 MILES IN LENGTH IS NOT PERMITTED.
ODOT RESERVES THE RIGHT TO REVOKE THE PERMIT IF THE MOT GUIDELINES ARE NOT MET.

HOURS OF OPERATION IN ROW
ALLOWABLE HOURS OF OPERATION ARE 9AM TO 3PM. ALL DAY SAT & SUN.

TRAFFIC RESTRICTION FORM
APPLICANT SHALL FILL OUT AND SUBMITED TO PIO & DWZTM *ODOT DISTRICT SIX - PERMIT AND LOCAL LET CLOSURE AND RESTRICTION* FORM WHEN NOTIFYING THEM OF THE UPCOMING TRAFFIC RESTRICTION.

CITY OF COLUMBUS OCCUPANCY PERMIT
TO WORK WITHIN THE CITY OF COLUMBUS, THE APPLICANT MUST ALSO OBTAIN AN OCCUPANCY PERMIT FROM THE CITY OF COLUMBUS PERMIT DEPARTMENT.

Ohio Department of Transportation District Six
Permit and Local Let
Closure and Restriction Notification Form

* Indicates a Mandatory Field

* Permit Number

* County

City

Find Coordinates

* Road (SR, US, or I-)

* Road Status

Type of work

* Work completed by

Maintenance of Traffic (MOT)

* Your Name

* Your Email

* Your Phone Number

Your Cell Phone Number

* Traffic Restriction Start Date/Time — * Date — * Time

* Traffic Restriction Completion Date/Time — * Date — * Time

* Are Restrictions 24-hours a Day — No — Yes

please clarify below in the description

Start Mile Marker (SLM)

* Closest Intersecting Road

End Mile Marker (SLM)

* Closest Intersecting Road

* Direction

* Lanes of Traffic Maintained

Include total number of lanes available

(E.G. 1 of 2 lanes maintained) If project has both directions specify for each

* Person Responsible for work

(This is the contact name for the person on site E.G. contractor or permit holder)

* On Site Phone Number (with area code)

Please see for more information/examples

* Description of Work

The following information is additional required information for special hauls.

* Lane Closure/Restrictions

If there is a restriction, specify available lane width

Available Lane Width (edge line to edge line)

Feet: Inches:

Available Pavement Width

Feet: Inches:

* Ramp Closure/Restrictions:

If there is a restriction, specify available lane width

Available Lane Width (edge line to edge line)

Feet: Inches:

Available Pavement Width

Feet: Inches:

Bridge Work

Vertical Bridge Clearance — Feet: Inches:

Available Roadway Width — Feet: Inches:

* Bridge Direction

* Listed Detour if Applicable: (if not applicable state N/A)

Additional Closure/Restriction Information:

* What type of Traffic control is being utilized? (e.g. portable barrier, drums, temp signal, flaggers etc.)

* What standard construction drawings are being used and/or Typical Applications (TAs) If SCD or TAs are not applicable MOT drawings must be attached

* Who will be setting up the Traffic control? (List name of contractor or subcontractor and contact number.)

Everstream SOF-134874 (John Stevens) 6040 Collings Dr (Columbus-ODOT)

Starting at an existing HH located on the SOUTH side of SR 317, approx. 2050' easterly from the SE corner of the intersection of Lockburne Rd. and SR 317, begin bore westerly approx. 215' along the SOUTH side of SR 317. Then continue bore northerly across SR 317 approx. 215' to an existing HH.

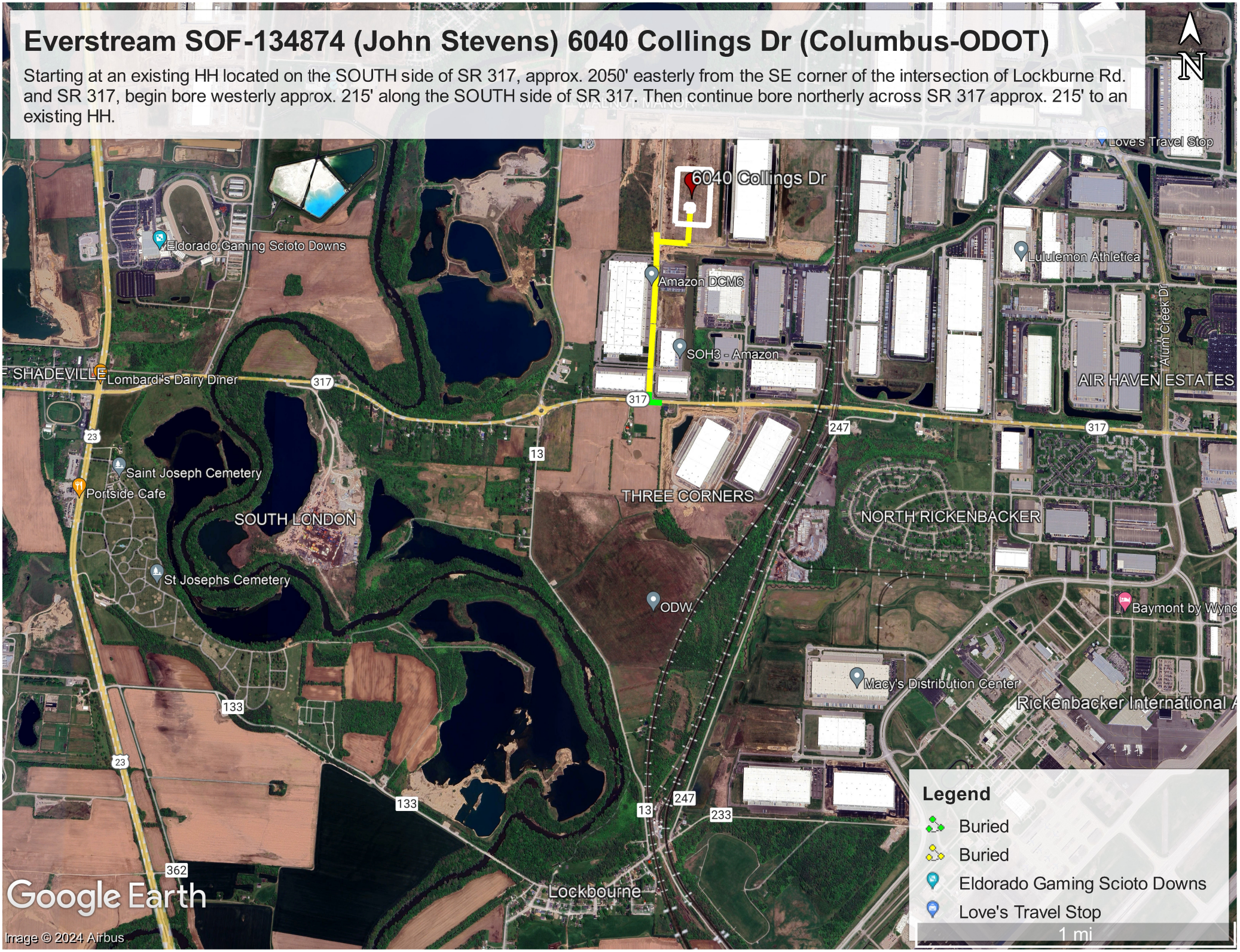

Everstream SOF-134874 (John Stevens) 6040 Collings Dr (Columbus-ODOT)

Starting at an existing HH located on the SOUTH side of SR 317, approx. 2050' easterly from the SE corner of the intersection of Lockbourne Rd. and SR 317, begin bore westerly approx. 215' along the SOUTH side of SR 317. Then continue bore northerly across SR 317 approx. 215' to an existing HH.

EVERSTREAM
SITE ADDRESS: 6040 COLLINGS DR.
LOCKBOURNE, OH 43137
SITE ID: EV-ETHS-ON-134874
ES IMP TICKET: IMP 134874
(SOF-134874)

TOTAL FOC RATE CARD			
	UNITS	ESTIMATED QUANTITY	ACTUAL QUANTITY
FOC AERIAL	FT	0	0
FOC BURIED	FT	4205	0
1-2" HDPE	FT	472	0
HANDHOLE 24"X36"X40"	EACH	0	0
EMT	FT	0	0

CONSTRUCTION NOTES

1. LEAVE 30' COILED AT TERMINATION POINT.
2. LEAVE 75' COILED IN EACH VAULT.
3. LEAVE 150' OF SLACK FOR EVERY 1500' OF LASHED CABLE IN RURAL AREAS, 120' OF SLACK FOR EVERY 1000' OF LASHED CABLE IN URBAN AREAS.
4. BORE A NEW 48F 500' FROM EXISTING EVERSTREAM HH AT THE FRONT OF 1345 LONDON GROVEPORT RD WEST ON LONDON GROVEPORT RD AND THEN NORTH ON COLLINGS DR TO COMMON HH 6.
5. PULL 2898' OF NEW 48F NORTH ON COLLINGS DR FROM COMMON HH 6 TO COMMON HH 2. PULL 735' OF NEW 48F FROM COMMON HH 2 EAST ON THE ACCESS RD TO COMMON HH 1. PULL 705' OF NEW 48F NORTH FROM HH 1 INTO THE SERVER ROOM AND PLACE NEW FIBER AND EQUIPMENT ON THE NORTH WALL.
6. CONTRACTOR SHALL REPLACE ALL DRIVEWAYS, SIDEWALKS, OR OTHER DISTURB SURFACES TO A CONDITION EQUAL TO OR BETTER THAN THE PRIOR EXISTING CONDITIONS.
7. CONTRACTOR SHALL MAINTAIN ACCESS TO ALL ADJACENT PROPERTIES DURING CONSTRUCTION OPERATIONS.
8. CONTRACTOR SHALL BE RESPONSIBLE FOR VERIFYING AND LOCATING ALL SERVICES PRIOR TO BEGINNING ANY EXCAVATION.
9. CONTRACTOR SHALL MAINTAIN A MINIMUM OF 3' HORIZONTAL AND 1' VERTICAL CLEARANCE FROM ALL WATER AND SEWER LINES.

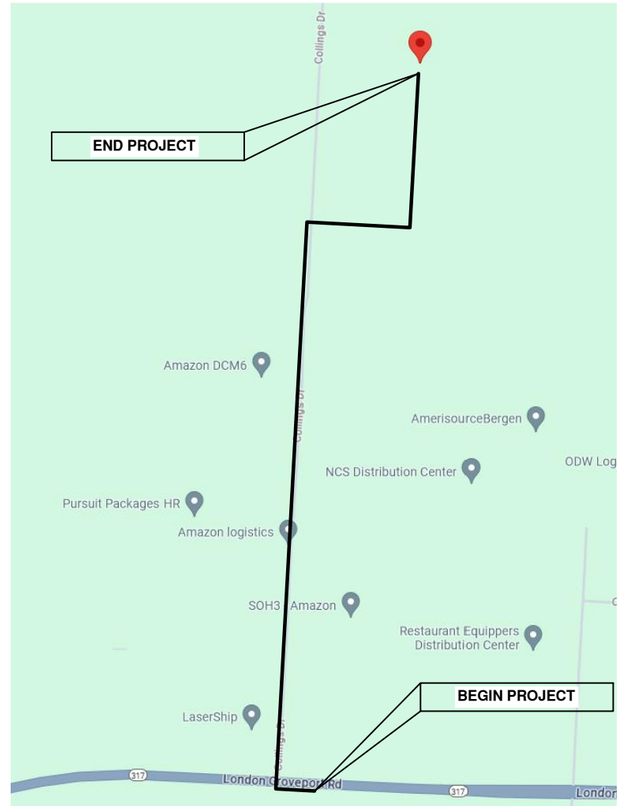

SHEET INDEX:

SHEET 1.....SITE MAP & NOTES
SHEET 2.....GENERAL NOTES
SHEET 3–4.....TRAFFIC CONTROL NOTES
SHEET 5–12.....PLAN & PROFILE
SHEET 13–15.....MOT
SHEET 16.....PHOTOS
SHEET 17–22.....DETAILS

CONTACT INFORMATION

EVERSTREAM
JOHN STEVENS
380-209-5936

N

ASBUILT CHANGES / REVISIONS

DATE	DESCRIPTIONS
–	–
–	–
–	–
–	–
–	–

OHIO Utilities Protection SERVICE
Call Before You Dig
1-800-362-2764
OR 8-1-1
CALL TWO WORKING DAYS BEFORE YOU DIG
(NON MEMBERS MUST BE CALLED DIRECTLY)

6040 COLLINGS DR.

DESIGNER: K. KHAY

everstream®
FASTER FIBER. BETTER BUSINESS.®

INFORMATION IN THIS DOCUMENT IS PROPRIETARY AND CONFIDENTIAL AND SHALL NOT BE USED, COPIED, REPRODUCED, OR DISCLOSED WITHOUT PRIOR WRITTEN CONSENT OF EVERSTREAM

PLANS PREPARED BY:
NEESAI CAD DESIGNS

Drawing Information: Facility locations are general in nature and are only intended for approximate location reference. Neesai CAD Deisgns will not be held liable for the accuracy and will not assume responsibility for any damages resulting from these drawings.

LEGEND

E/P = EX. EDGE OF PAVEMENT		OHF = PROP. OVERHEAD FIBER	
C/L = EX. CENTER LINE		B = PROP. BURIED FIBER	
R/W = EX. RIGHT OF WAY		P/L = EX. PROPERTY LINE	

PROPOSED ANCHOR & GUY	PROPOSED HANDHOLE
FOREIGN/EXISTING ANCHOR & GUY	EXISTING HANDHOLE
AERIAL STORAGE LOOP	STORM DRAIN
BURIED STORAGE LOOP	FIRE HYDRANT

SCALE: NONE

SHEET: 1 OF 22

GENERAL NOTES FOR THE DIVISION OF SEWERS AND DRAINS:

UTILITY LOCATORS WILL ONLY LOCATE AND MARK MAINLINE SEWERS, AFTER AN OH-811 LOCATE REQUEST IS PLACED. THE CONTRACTOR IS RESPONSIBLE FOR FIELD VERIFYING THE LOCATION OF ALL MAIN LINE SEWERS AND LOCATING ALL PRIVATE SEWER SERVICE LATERALS. THE CONTRACTOR WILL BE HELD RESPONSIBLE FOR ANY DAMAGES TO SEWER MAINS AND/OR SERVICE LATERALS CAUSED DURING CONSTRUCTION. ALL REPAIRS TO THE SEWER LINES AND/OR SERVICE LATERALS MUST BE COMPLETED BY A CITY OF COLUMBUS LICENSED SEWER CONTRACTOR UNDER A SEPARATE SEWER PERMIT.

THE CONTRACTOR MUST MAINTAIN A 3' HORIZONTAL & 1' VERTICAL CLEARANCE FROM THE O.D. OF ALL SEWERS AND APPURTENANCES TO THE NEAREST EDGE OF THE FACILITY BEING PLACED. FOR BRICK SEWERS MAINTAIN 10' HORIZONTAL & 5' VERTICAL CLEARANCE FROM O.D. TO NEAREST EDGE OF PROPOSED FACILITY.

SEE SPECIFIC NOTE FOR PROPOSED SEWERS

PAVEMENT CUTTING, SAWING AND EXCAVATION OPERATIONS NOTE:

ALL PUBLIC AGENCIES AND PRIVATE CONTRACTORS PERFORMING PAVEMENT-CUTTING OPERATIONS ON CITY OF COLUMBUS STREETS AND ROADWAYS SHALL PROTECT THE ENVIRONMENT FROM DISCHARGES CREATED BY THEIR PAVEMENT CUTTING OPERATIONS. NOTE THAT COLUMBUS CITY CODE 1145 PROHIBITS NON-STORM WATER DISCHARGE INTO THE CITY OF COLUMBUS SEWER SYSTEM, CURB INLETS AND ANY PART OF ITS MS4 (MUNICIPAL SEPARATE STORM SEWER SYSTEM).

THE REQUIREMENT INCLUDES BUT IS NOT LIMITED TO WET OR DRY SAW-CUTTING, JACK HAMMERING, EXCAVATION EQUIPMENT USE, ETC. THE PUBLIC AGENCY AND/OR PRIVATE CONTRACTOR WORK CREWS SHALL RECOVER AND DISPOSE OF DEBRIS, POLLUTED WATERS, OR SUCH DISCHARGES RESULTING FROM THEIR PAVEMENT CUTTING OPERATIONS AND PROTECT ALL STORM SEWER INLETS FROM RECEIVING ANY DISCHARGES FROM THE CONSTRUCTION OPERATIONS. THE AGENCY OR CONTRACTOR RESPONSIBLE FOR EACH PAVEMENT CUTTING ACTIVITY SHALL BE SOLELY LIABLE FOR NOTICE OF VIOLATIONS (NOV/S) AND FINES ISSUED BY CITY OF COLUMBUS AND/OR STATE OF OHIO AUTHORITIES.

EQUIPMENT, MATERIALS AND METHODS SHALL BE PROVIDED BY THE RESPONSIBLE PUBLIC AGENCY AND/OR PRIVATE CONTRACTOR TO WORK CREWS PERFORMING THE PAVEMENT CUTTING ACTIVITY AND MADE AVAILABLE TO WORK CREWS FOR USE IN CLEANING UP DISCHARGES RESULTING FROM SUCH CUTTING ACTIVITIES AND PREVENTING RUNOFF. ALL WORK CREWS SHALL BE TRAINED TO EXERCISE AND EMPLOY EQUIPMENT, MATERIALS, AND ENVIRONMENTAL PROTECTIVE MEASURES TO PREVENT POLLUTED DISCHARGES FROM ENTERING THE CITY OF COLUMBUS STORM SEWER SYSTEM AND WATERS OF THE STATE OF OHIO.
THE PUBLIC AGENCY AND/OR PRIVATE CONTRACTORS ARE SOLELY RESPONSIBLE FOR ENSURING THAT THE INLET PROTECTION IS ADEQUATE. THE MOST STRINGENT PROJECT PLANS, NOTES AND/OR DRAWINGS INCLUDING STORM WATER POLLUTION PREVENTION PLAN (SWP3) OR SPILL PREVENTION/REMEDIATION PLAN SHALL APPLY TO ALL PAVEMENT CUTTING, SAWING OR EXCAVATION OPERATIONS.

IN CASE OF EMERGENCY CONTACT:
CITY OF COLUMBUS DIVISION OF SEWERAGE & DRAINAGE
1250 FAIRWOOD AVENUE, COLUMBUS, OHIO 43206
PHONE: 614-645-7102 (SMOC 24/7 DISPATCH LINE)

FOR THE DIVISION OF POWER

THE DIVISION OF POWER (DOP) MAY HAVE UNDERGROUND OR OVERHEAD PRIMARY POWER, SECONDARY POWER, CONDUIT SYSTEMS AND STREET LIGHTING AT THIS WORK LOCATION. THE CONTRACTOR IS HEREBY REQUIRED TO CONTACT OHIO 811 AT 811 OR 1-800-362-2764 FORTY-EIGHT (48) HOURS PRIOR TO CONDUCTING ANY ACTIVITY WITHIN THE CONSTRUCTION AREA.

ANY REQUIRED RELOCATION, SUPPORT, PROTECTION, OR ANY OTHER ACTIVITY CONCERNED WITH THE CITY'S ELECTRICAL FACILITIES IN THE CONSTRUCTION AREA IS TO BE PERFORMED BY THE CONTRACTOR UNDER THE DIRECTION OF DOP PERSONNEL AT THE EXPENSE OF THE PROJECT. DOP SHALL MAKE ALL FINAL CONNECTIONS TO DOP'S EXISTING ELECTRICAL SYSTEM AT THE EXPENSE OF THE PROJECT. THE CONTRACTOR SHALL USE MATERIAL AND MAKE REPAIRS TO A CITY OF COLUMBUS STREET LIGHTING SYSTEM BY FOLLOWING DOP'S "MATERIAL AND INSTALLATION SPECIFICATIONS (MIS) AND THE CITY OF COLUMBUS "CONSTRUCTION AND MATERIALS SPECIFICATIONS (CMSC). ANY NEW OR RE- INSTALLED UNDERGROUND STREETLIGHT SYSTEM SHALL REQUIRE TESTING AS REFERRED TO IN SECTION 1001.18 OF THE CMSC MANUAL. THE CONTRACTOR SHALL CONFORM TO DOP'S EXISTING STREET LIGHTING LOCKOUT/TAGOUT (LOTO) PROCEDURE, MIS-01, COPIES OF WHICH ARE AVAILABLE FORM DOP

IF ANY ELECTRIC FACILITY BELONGING TO DOP IS DAMAGED IN ANY MANNER BY THE CONTRACTOR, ITS AGENTS, SERVANTS, OR EMPLOYEES, AND REQUIRES EMERGENCY REPAIRS, THE DOP DISPATCH OFFICE SHOULD BE CONTACTED IMMEDIATELY AT (614) 645-7627. DOP SHALL MAKE ALL NECESSARY REPAIRS, AND THE EXPENSE OF SUCH REPAIRS AND OTHER RELATED COSTS SHALL BE PAID BY THE CONTRACTOR TO THE DIVISION OF POWER, CITY OF COLUMBUS, OHIO.

IN CASE OF EMERGENCY CONTACT:
DIVISION OF POWER
910 DUBLIN ROAD, COLUMBUS, OHIO 43215
PHONE: 614-645-7788

WATER NOTES:

EXPOSE WATER LINE AT CROSSING(S) TO VERIFY DEPTH AND LOCATIONPRIOR TO AND DURING ANY DIRECTIONAL BORING.

THE CONTRACTOR IS RESPONSIBLE FOR LOCATED ALL CUSTOMERS OWNED SERVICE LINES. THE CONTRACTOR SHALL FIELD VERIFY THE HORIZONTAL AND VERTICAL LOCATION OF ANY CITY OR CUSTOMER OWNED MAIN OR SERVICE LINE THAT MAY BE AFFECTED BY THE PROPOSED CONSTRUCTION ACTIVITIES. FIELD VERIFICATION SHALL TAKE PLACE PRIOR TO AN ACTIVITY THAT MAY JEOPARDIZE THE INTEGRITY OF THE FACILITY AND AT A LOCATION NEAREST THE POINT OF POSSIBLE CONFLICT.

ANY REPAIR TO CITY OR CUSTOMER OWNED WATER LINES ARE THE RESPONSIBILITY OF THE CONTRACTOR. THE CONTRACTOR SHALL CONTACT THE CITY OF COLUMBUS, DIVISION OF WATER AT 614-645-7788 PRIOR TO ANY REPAIRS ON CITY OWNED WATER FACILITIES. THE CONTRACTOR MUST BE A CITY OF COLUMBUS LICENSED WATER CONTRACTOR. THE CONTRACTOR SHALL MAINTAIN A MINIMUM OF 3' HORIZONTAL AND 1' VERTICAL CLEARANCE FROM THE OUTSIDE DIAMETER OF ALL WATER LINES AT 8' FROM ANY "TEE" CONNECTION, BANDS, AND ENDS OF THE WATER LINES, FROM OUTSIDE DIAMETER TO THE NEAREST EDGE OF THE FACILITY BEING PLACED.

IF DURING EXCAVATION, THE POLYETHYLENE ENCASEMENT OF THE EXISTING WATER MAIN BECOMES DAMAGED, THE CONTRACTOR SHALL REPAIR THE POLYETHYLENE ENCASEMENT PER MANUFACTURE'S SPECIFICATIONS AND DOW STANDARD DRAWINGS L-1003 AND L-1004, AT THEIR OWN EXPENSE. ENSURE THAT THE ENTIRE EXPOSED AREA SHALL BE COVERED WITH NEW POLYETHYLENE ENCASEMENT AND SECURELY TAPED, PRIOR TO BACKFILL.

IF THE ALIGNMENT OF THE PROPOSED INFRASTRUCTURE IS CROSSING OR IS PARALLEL (WITHIN IN 5-FEET) OF A 20-INCH OR LARGER PRESTRESSED CONCRETE CYLINDER PIPE (PCCP), THE FOLLOWING NOTE MUST BE INCLUDED ON THE PLAN SUBMITTED FOR WATER REVIEW:

PRIOR TO INSTALLATION OF THE PROPOSED INFRASTRUCTURE THAT IS TO CROSS OR IS PARALLEL (WITHIN IN 5-FEET) OF THE IDENTIFIED PRESTRESSED CONCRETE CYLINDER PIPE (PCCP), THE CONTRACTOR SHALL EXPOSE THE EXISTING PCCP WATER MAIN. THE PCCP WATER MAIN SHALL BE EXPOSED SUFFICIENTLY ENOUGH TO VERIFY THAT NO DAMAGE WILL OCCUR DURING INSTALLATION OF PROPOSED INFRASTRUCTURE.

WHEN PARALLELING, THE EXISTING PCCP WATER MAIN SHALL BE EXPOSED AT THE BEGINNING, END AND EVERY 100-FEET THROUGH THE PROPOSED INFRASTRUCTURE ALIGNMENT. WHEN CROSSING, THE EXISTING PCCP WATER MAIN SHALL BE EXPOSED WHERE THE PROPOSED INFRASTRUCTURE CROSSES THE EXISTING PCCP WATER MAIN.

A CITY INSPECTOR WILL BE REQUIRED TO BE ON-SITE TO WITNESS THE EXCAVATION OF THE EXISTING PCCP WATER MAIN. THE CONTRACTOR IS TO CONTACT THE DPS DIVISION OF DESIGN & CONSTRUCTION AT 614-645-0433 TO SCHEDULE THE INSPECTION.

IF A LEAD OR GALVANIZED WATER SERVICE LINE IS ENCOUNTERED AND NOT DAMAGED, THE CONTRACTOR SHALL REPORT THE PRESENCE OF THE TAP VIA EMAIL TO WATERQUALITY@COLUMBUS.GOV. INCLUDE THE SITE'S ADDRESS AND A PHOTO OF THE TAP IN THE EMAIL. IF THE SERVICE IS DAMAGED, IMMEDIATELY CONTACT THE DIVISION OF WATER DISTRIBUTION ENGINEERING OFFICE AT 614-645-7677 TO REQUEST THE SHUT OFF OF THE EXISTING CURB STOP.

DIVISION OF FORESTRY

TREES MAY EXIST IN THE ROW IN VARIOUS LOCATIONS ALONG THIS PROJECT. ALL EXCAVATIONS, OPEN TRENCHES, OR BORE PITS LOCATED WITHIN 15 FEET OF THE TRUNK OF A TREE WILL REQUIRE INSPECTION PRIOR TO BACKFILLING. CALL FORESTRY AT 614/645-5238 TO SCHEDULE ALL INSPECTIONS. EXCAVATIONS NEAR TREES THAT ARE BACKFILLED PRIOR TO INSPECTION WILL RESULT IN THE TREE AND STUMP NEEDING TO BE REMOVED AT THE EXPENSE OF THE PERMIT HOLDER SINCE PROPER INSPECTION OF ANY ROOT DAMAGE WOULD NO LONGER BE POSSIBLE.

APPLICANT MUST CONTACT THE CITY'S DIVISION OF FORESTRY (614-645-6648) PRIOR TO ANY IMPACT TO ANY PUBLIC VEGETATION, THIS INCLUDES THE CUTTING OF TREE ROOTS AND BRANCHES, BUSHES, OR LANDSCAPE AREA WITHIN THE CITY'S PUBLIC RIGHTS-OF-WAY. PUBLIC TREES WILL BE PROTECTED AGAINST INJURY OF DAMAGE TO BRANCHES, TRUNKS OR ROOTS FROM CONSTRUCTION AND EXCAVATION CONSTRUCTION MATERIALS AND EXCAVATION DERBIES, CHEMICALS, FUEL, EQUIPMENT OR VEHICLES, ARE NOT TO BE STOCKPILED, STORED, THE DRIP-LINE OF PUBLIC TREES. FAILURE TO CONTACT THE CITY FORESTER WILL RESULT IN THE APPLICANT REIMBURSING THE DIVISION FOR THE COST DETERMINED BY THE CURRENT EDITION OF THE "GUIDE FOR PLANT APPRAISAL" PUBLISHED BY INTERNATIONAL SOCIETY OF AGRICULTURE.

FOR THE CITY OF COLUMBUS - DEPARTMENT OF TECHNOLOGY

COC-DOT MAY HAVE OVERHEAD AND UNDERGROUND FIBER CABLES EXISTING AT THIS WORK SITE. ANY REQUIRED RELOCATION, SUPPORT, PROTECTION, OR ANY OTHER ACTIVITY CONCERNED WITH COC-DOT'S CABLES, CONDUITS, MANHOLES, HAND HOLES, PULL BOXES, PAD MOUNT CABINETS OR OTHER FACILITIES AND/OR MATERIALS IN THE CONSTRUCTION AREA IS TO BE PERFORMED BY THE CONTRACTOR UNDER THE DIRECTION OF COC-DOT PERSONAL AND AT THE EXPENSE OF THE PROJECT. THE CONTRACTOR SHALL USE MATERIALS AND MAKE REPAIRS TO A COC-DOT'S SYSTEM BY FOLLOWING THE COC-DOT MATERIAL AND INSTALLATION SPECIFICATIONS IN I-NET'S GENERAL SPECIFICATIONS DOCUMENT, HEREAFTER REFERRED TO SIMPLY AS THE "IGSD". ANY RE-INSTALLED FIBER SHALL REQUIRE TESTING AS REFERRED TO IN IGSD. THE CONTRACTOR SHALL BE CITY OF COLUMBUS APPROVED FOR FIBER SPLICING PLUS MEET IGSD REQUIREMENTS. IF ANY CABLE FACILITY BELONGING TO THE COC-DOT IS DAMAGED IN ANY MANNER BY THE CONTRACTOR, HIS AGENTS, SERVANTS OR EMPLOYEES, THAT WOULD REQUIRE EMERGENCY REPAIRS, THE COC-DOT MAINTENANCE CONTRACTOR SHALL MAKE ALL NECESSARY REPAIRS, AND THE EXPENSE OF SUCH REPAIRS AND OTHER RELATED COSTS SHALL BE PAID BY THE CONTRACTOR TO THE DIVISION OF TECHNOLOGY CITY OF COLUMBUS. NOTE: ANY WORK PERFORMED OR MATERIALS INSTALLED BY THE CONTRACTOR THAT HAS NOT BEEN APPROVED BY COC-DOT PERSONAL OR HAS BEEN CONSTRUCTED OUTSIDE OF THE REQUIREMENTS OF THE IGSD WILL BE REPLACED OR REBUILT AT THE CONTRACTORS EXPENSE. CONTACT (614) 645-7756 COC-DOT FIBER PHYSICAL PERSONAL FOR QUESTIONS.

ASBUILT CHANGES / REVISIONS

DATE	DESCRIPTIONS
–	–
–	–
–	–
–	–
–	–

OHIO Utilities Protection SERVICE
Call Before You Dig
1-800-362-2764
OR 8-1-1
CALL TWO WORKING DAYS BEFORE YOU DIG
(NON MEMBERS MUST BE CALLED DIRECTLY)

6040 COLLINGS DR.

DESIGNER: K. KHAY

everstream®
FASTER FIBER. BETTER BUSINESS.®

INFORMATION IN THIS DOCUMENT IS PROPRIETARY AND CONFIDENTIAL AND SHALL NOT BE USED, COPIED, REPRODUCED, OR DISCLOSED WITHOUT PRIOR WRITTEN CONSENT OF EVERSTREAM

PLANS PREPARED BY:
NEESAI CAD DESIGNS
Drawing Information: Facility locations are general in nature and are only intended for approximate location reference. Neesai CAD Deisgns will not be held liable for the accuracy and will not assume responsibility for any damages resulting from these drawings.

LEGEND

E/P	= EX. EDGE OF PAVEMENT	OHF	= PROP. OVERHEAD FIBER		PROPOSED ANCHOR & GUY		PROPOSED HANDHOLE
C/L	= EX. CENTER LINE	B	= PROP. BURIED FIBER		FOREIGN/EXISTING ANCHOR & GUY		EXISTING HANDHOLE
R/W	= EX. RIGHT OF WAY	P/L	= EX. PROPERTY LINE		AERIAL STORAGE LOOP		STORM DRAIN
					BURIED STORAGE LOOP		FIRE HYDRANT

SCALE: NONE

SHEET: 2 OF 22

CITY OF COLUMBUS
DEPARTMENT OF PUBLIC SERVICE

TEMPORARY TRAFFIC CONTROL (NOTES REQUIRED ON ALL PROJECTS)

1. ALL TEMPORARY TRAFFIC CONTROL (TTC) DEVICES SHALL BE FURNISHED, ERECTED, MAINTAINED AND REMOVED BY THE CONTRACTOR IN ACCORDANCE WITH THE OHIO MANUAL OF UNIFORM TRAFFIC CONTROL DEVICES FOR STREETS AND HIGHWAYS (CURRENT EDITION). COPIES ARE AVAILABLE FROM THE OHIO DEPARTMENT OF TRANSPORTATION, OFFICE OF CONTRACTS, 1980 WEST BROAD STREET, COLUMBUS, OHIO 43223. NOTE: ALL DEVICES SHALL COMPLY, FOR CONDITION AND LOCATION, WITH THE CURRENT EDITION OF THE NCHRP 350 AND MASH CRASH TESTING GUIDELINES.

2. CONSTRUCTION OPERATIONS SHALL NOT BEGIN UNTIL ALL TRAFFIC CONTROL IS IN PLACE AND APPROVED BY THE DEPARTMENT OF PUBLIC SERVICE INSPECTOR. IF THE CONTRACTOR DOES NOT COMPLY WITH THE STANDARDS, INCLUDING THE INSTALLATION OF TEMPORARY PAVEMENT MARKINGS AND THE REMOVAL OF CONFLICTING TRAFFIC CONTROLS, THEIR PERMIT SHALL BE REVOKED AND ALL WORK SHALL BE TERMINATED. TEMPORARY PAVEMENT MARKINGS TO INCLUDE, BUT NOT LIMITED TO, CHANNELIZING LINES, EDGE LINES, AND CENTERLINES SHALL BE INSTALLED AND MAINTAINED ON ALL CONSTRUCTION OPERATIONS LASTING A MINIMUM OF 14 CALENDAR DAYS OR AS DIRECTED BY THE TEMPORARY TRAFFIC CONTROL COORDINATOR OR THE PROJECT ENGINEER.

3. THE CONTRACTOR SHALL GIVE ADVANCE NOTIFICATION (WRITTEN AND VERBALLY) TO THE TEMPORARY TRAFFIC CONTROL COORDINATOR AT 614-645-0355 OR 614-645-5845 & THE DIVISION OF REFUSE COLLECTION'S OPERATION MANAGER AT 614-645-1675, WRITTEN NOTIFICATION TO PAVING THE WAY AT PAVINGTHEWAY@MORPC.ORG OR VERBAL TO 614-233-4200, PROJECT ENGINEER, AND THE SENIOR SERVICE PLANNER OF COTA AT 614-308-4373 OR FAX 614-275-5933, INFORMING THEM OF ALL UPCOMING MAINTENANCE OF TRAFFIC CHANGES ON A WEEKLY BASIS. NOTIFICATION SHALL INCLUDE, BUT NOT BE LIMITED TO, WHAT, WHERE, WHEN, AND HOW PEDESTRIAN AND VEHICULAR TRAFFIC WILL BE AFFECTED, AND THE TEMPORARY TRAFFIC CONTROL PROCEDURES THE CONTRACTOR IS PLANNING TO USE. THE TYPE OF TRAFFIC CHANGE SHALL DETERMINE THE LENGTH OF ADVANCE NOTIFICATION REQUIRED:

TYPE OF CHANGE	ADVANCE NOTIFICATION NEEDED
DETOURS/ROAD CLOSURES	30-DAY NOTIFICATION PRIOR TO CLOSURE
LANE CLOSURES LASTING 2 WEEKS OR MORE	2-WEEKS
LANE CLOSURES OF LESS THAN 2 WEEKS	3-DAYS
LANE CLOSURES OF 2 DAYS OR LESS	1-DAY

THE COTA SENIOR SERVICE PLANNER SHALL BE CONTACTED 30 DAYS PRIOR TO ANY PLANNED CLOSURE ON ASSIGNED COTA ROUTES. ANY OTHER UNFORESEEN IMPACTS TO TRAFFIC SHALL BE IMMEDIATELY REPORTED AS THEY OCCUR.

4. THE CONTRACTOR SHALL BE RESPONSIBLE FOR THE PROTECTION AND SAFE MOVEMENT OF PEDESTRIANS THROUGH, AROUND, OR DETOURED AWAY FROM THE CONSTRUCTION SITE. TRAFFIC CONTROL FOR PEDESTRIAN MOVEMENT SHALL BE AS PER CITY OF COLUMBUS CONSTRUCTION AND MATERIAL SPECIFICATIONS, CITY OF COLUMBUS STANDARD CONSTRUCTION DRAWINGS, AND FIGURES 6H-28 (TA-28) AND 6H-29 (TA-29) OF PART VI OF THE OHIO MANUAL OF UNIFORM TRAFFIC CONTROL DEVICES. WHEN NOT SHOWN ON A SIGNED PLAN, ALL SIDEWALK DIVERSIONS AND TEMPORARY MID-BLOCK CROSSINGS SHALL BE PREAPPROVED BY THE PROJECT ENGINEER OR THE TEMPORARY TRAFFIC CONTROL COORDINATOR. ACCESS FOR PEDESTRIAN AND VEHICULAR TRAFFIC TO ALL ADJOINING PROPERTIES SHALL BE MAINTAINED AT ALL TIMES.

5. **MAINTAINING TRAFFIC DURING HOLIDAYS AND SPECIAL EVENTS**
NO WORK SHALL BE PERFORMED AND ALL EXISTING LANES SHALL BE OPEN TO TRAFFIC DURING DESIGNATED HOLIDAYS OR SPECIAL EVENTS INCLUDING THE OHIO STATE FOOTBALL HOME GAME. THE PERIOD OF TIME THAT THE LANES ARE TO BE OPEN DEPENDS ON THE DAY OF THE WEEK ON WHICH THE HOLIDAY OR EVENT FALLS. CONTACT THE CITY OF COLUMBUS TEMPORARY TRAFFIC CONTROL COORDINATOR, 614-645-5845 OR CELL, 614-332-7472 FOR EVENT DATES, LOCATIONS, AND SCHEDULE. HOLIDAYS WILL CONSIST OF CHRISTMAS, NEW YEARS, FOURTH OF JULY-RED, WHITE AND BOOM FIREWORKS NIGHT (6:00AM-12MIDNIGHT), MEMORIAL DAY, LABOR DAY, AND THANKSGIVING. RED, WHITE AND BOOM, FIREWORKS CELEBRATION AND A MINIMUM OF ONE DAY PRIOR TO FIREWORKS NIGHT SHALL REQUIRE ALL TEMPORARY TRAFFIC CONTROL DEVICES TO BE REMOVED FROM THE PROJECT AREA AND PLACE EITHER IN A PRE-DETERMINED LOCATION APPROVED BY THE TEMPORARY TRAFFIC CONTROL COORDINATOR OR COMPLETELY REMOVED FROM THE SITE.

6. THE CONTRACTOR SHALL CONTACT THE CITY OF COLUMBUS TEMPORARY TRAFFIC CONTROL COORDINATOR FOR ANY ADDITIONAL MOT REQUIREMENTS FOR SPECIAL EVENTS, INCLUDING OSU FOOTBALL HOME GAMES.

7. THE CONTRACTOR SHALL MAINTAIN ALL PERMANENT TRAFFIC CONTROLS NOT IN CONFLICT WITH THE TEMPORARY TRAFFIC CONTROLS THROUGHOUT THIS PROJECT. PERMANENT TRAFFIC CONTROLS MAY BE TEMPORARILY RELOCATED OR COVERED, AS APPROVED BY THE ENGINEER. THE CONTRACTOR SHALL ASSUME ALL LIABILITY FOR MISSING, DAMAGED, OR IMPROPERLY PLACED SIGNS.

8. ANY WORK DONE BY THE DEPARTMENT OF PUBLIC SERVICE, INCLUDING INSTALLATION, RELOCATION, REMOVAL AND/OR REPLACEMENT OF TEMPORARY TRAFFIC CONTROL DEVICES AS A RESULT OF WORK DONE BY THE CONTRACTOR OR AS A RESULT OF NEGLIGENCE OF THE CONTRACTOR, SHALL BE AT THE CONTRACTORS' EXPENSE.

9. THE ROADWAY SHALL NOT BE OPENED TO NON-CONSTRUCTION TRAFFIC UNTIL THE CRITICAL PERMANENT TRAFFIC CONTROLS ARE IN PLACE, OR UNTIL TEMPORARY TRAFFIC CONTROLS APPROVED BY THE ENGINEER, ARE INSTALLED. THE CRITICAL PERMANENT TRAFFIC CONTROLS ARE STOP, YIELD, ONE - WAY, DO NOT ENTER, RESTRICTED TURN SIGNS AND ALL STREET NAME SIGNS. OTHER CRITICAL SIGNS MAY BE NOTED ON THE PLANS AS WELL. THE CONTRACTOR ASSUMES ALL LIABILITY FOR THE PREMATURE REMOVAL OF TEMPORARY TRAFFIC CONTROLS.

10. **ITEM 614 - MAINTAINING TRAFFIC**
ALL COSTS THAT CONSIST OF MAINTAINING AND PROTECTING VEHICULAR AND PEDESTRIAN TRAFFIC ACCORDING TO THE LATEST EDITION OF THE CITY OF COLUMBUS CONSTRUCTION AND MATERIAL SPECIFICATIONS, THE OHIO MANUAL OF UNIFORM TRAFFIC CONTROL DEVICES FOR STREETS AND HIGHWAYS (OMUTCD), AND PER THE REQUIREMENTS DESIGNATED IN THE PLAN INCLUDING ALL LAW ENFORCEMENT OFFICER (LEO) AND FLAGGER HOURS SHALL BE INCLUDED IN THE LUMP SUM ITEM 614.
IN ADDITION TO THE REQUIREMENTS HEREIN, AND THE LATEST EDITION OF THE OHIO MANUAL OF UNIFORM TRAFFIC CONTROL DEVICES, A UNIFORMED LAW ENFORCEMENT OFFICER (LEO) SHALL BE PROVIDED FOR CONTROLLING TRAFFIC UNDER THE FOLLOWING CONDITIONS:

- WORK WITHIN A SIGNALIZED INTERSECTION, DEFINED AS THE AREA BOUNDED BY THE REAR XWALK LINES
- WHEN FLAGGING WITHIN THE INTERSECTION OF TWO ARTERIAL ROADWAYS
- WHEN SPECIFIED IN THE MAINTENANCE OF TRAFFIC PLAN OR AS WHEN DIRECTED BY THE PROJECT ENGINEER
- WHEN SHIFTING TRAFFIC LEFT OF CENTER, THROUGH A SIGNALIZED INTERSECTION, WITHOUT SHIFTING SIGNAL HEADS

A FLAGGER SHALL BE UTILIZED TO ASSIST IN CONTROLLING TRAFFIC WHILE EQUIPMENT IS ENTERING OR EXITING AN INTERSECTION OR WORK ZONE. THE CONTRACTOR MAY UTILIZE HIS OWN FLAGGER OR LEO UNDER PAY ITEM 614 MAINTAINING TRAFFIC, LUMP SUM. FLAGGERS AND LEO'S SHALL BE EQUIPPED ACCORDING TO THE STANDARDS FOR FLAGGING TRAFFIC CONTAINED IN THE OMUTCD. FLAGGING OPERATIONS PERFORMED BY LEO'S OR DESIGNATED FLAGGERS SHALL ONLY BE PERMITTED AS LONG AS ALL TRAFFIC CONTROL IS IN PLACE ACCORDING TO FIGURE 6H-10 (TA-10) IN THE OHIO MANUAL. PATROL CARS SHALL NOT BE USED IN FLAGGING OPERATIONS.

IF THE CONTRACTOR WISHES TO UTILIZE LEO'S WITH OR WITHOUT PATROL CARS FOR TRAFFIC CONTROL OTHER THAN FOR THAT REQUIRED IN THE PLANS, THEY MAY DO SO AT THEIR OWN EXPENSE. THE CONTRACTOR SHALL MAKE ARRANGEMENT THROUGH THE COLUMBUS POLICE DIVISION AT 614-645-4795.

LEO'S SHALL BE CONSIDERED TO BE EMPLOYED BY THE CONTRACTOR AND THE CONTRACTOR SHALL BE RESPONSIBLE FOR THEIR ACTIONS. ALTHOUGH EMPLOYED BY THE CONTRACTOR, THE CITY REPRESENTATIVE SHALL HAVE CONTROL OVER THEIR PLACEMENT. LEO'S SHALL NOT HAVE THE AUTHORITY TO CHANGE, EDIT OR MODIFY ANY MAINTENANCE OF TRAFFIC SCHEME WITHOUT THE PERMISSION OF THE TEMPORARY TRAFFIC CONTROL COORDINATOR OR PROJECT ENGINEER UNLESS AN EMERGENCY DEVELOPS.

IF A SAFETY HAZARD DEVELOPS, A LEO MAY BE ASSIGNED BY THE COLUMBUS PUBLIC SAFETY AND/OR THE PUBLIC SERVICE DIRECTOR AT THE CONTRACTOR'S EXPENSE.

ITEM 614 - LAW ENFORCEMENT OFFICER (LEO) WITH PATROL CAR, AS PER PLAN
IN ADDITION TO LEO AND FLAGGER HOURS INCLUDED IN ITEM 614 MAINTAINING TRAFFIC, LUMP SUM; THE FOLLOWING QUANTITIES HAVE BEEN CARRIED TO THE GENERAL SUMMARY TO BE USED AS DIRECTED BY THE ENGINEER OR AN ACCEPTABLE REPRESENTATIVE FOR THE CITY OF COLUMBUS. THE OFFICIAL PATROL CAR WITH TOP MOUNTED EMERGENCY FLASHING LIGHTS SHALL BE A PUBLIC SAFETY VEHICLE AS REQUIRED BY THE OHIO REVISED CODE. THE CONTRACTOR SHALL BE PAID FOR THIS BID ITEM ONLY IF DIRECTED BY THE ENGINEER.

ITEM 614, LAW ENFORCEMENT OFFICER WITH PATROL CAR, AS PER PLAN - _____ HOURS

ITEM 614 - LAW ENFORCEMENT OFFICER (LEO) WITHOUT PATROL CAR, AS PER PLAN
IN ADDITION TO LEO AND FLAGGER HOURS INCLUDED IN ITEM 614 MAINTAINING TRAFFIC, LUMP SUM; THE FOLLOWING QUANTITIES HAVE BEEN CARRIED TO THE GENERAL SUMMARY TO BE USED AS DIRECTED BY THE ENGINEER OR AN ACCEPTABLE REPRESENTATIVE FOR THE CITY OF COLUMBUS. THE CONTRACTOR SHALL BE PAID FOR THIS BID ITEM ONLY IF DIRECTED BY THE ENGINEER.

ITEM 614, LAW ENFORCEMENT OFFICER WITHOUT PATROL CAR, AS PER PLAN - _____ HOURS

TEMPORARY TRAFFIC CONTROL (IF APPLICABLE, FOR USE ON A PER PROJECT BASIS)

1. PORTABLE CHANGEABLE MESSAGE SIGNS (PCMS) SHALL BE INSTALLED A MINIMUM OF 7 DAYS PRIOR TO CLOSURE OF A ROADWAY. THE MESSAGE SHALL ADVISE THE MOTORIST OF THE DATES, TIMES, AND DURATION OF THE CLOSURE. THE PCMS SHALL REMAIN IN PLACE FOR 7 DAYS AFTER THE START OF THE CLOSURE.

2. WHEN NOT INCLUDED IN A SIGNED PLAN, A TTC PLAN (TTCP) INCLUDING PEDESTRIAN CONTROL SHALL BE SUBMITTED TO THE TTC COORDINATOR AT 614-645-0355 OR 614-645-5845 AT THE PRE-CONSTRUCTION MEETING OR A MINIMUM OF TEN (10) WORKING DAYS PRIOR TO BEGINNING WORK FOR APPROVAL. COPIES OF THE APPROVED TTCP SHALL BE GIVEN TO THE PROJECT ENGINEER AND KEPT ON SITE ALONG WITH THE STREET CLOSURE/OCCUPANCY PERMIT.

3. TYPE C STEADY-BURN OR TYPE D 360-DEGREE STEADY-BURN WARNING LIGHTS SHALL BE REQUIRED ON ALL BARRICADES, DRUMS, AND SIMILAR TRAFFIC CONTROL DEVICES IN USE AT NIGHT GAMES ONLY 42" REFLECTORIZED CHANNELIZING DEVICES (CONES) SHALL BE PERMITTED FOR NIGHTTIME WORK WITH THE APPROVAL OF THE TTC COORDINATOR AT 614-645-0355 OR 614-645-5845 PER O.D.O.T. STANDARDS.

4. A FLASHING ARROW PANEL (48" X 96"-TYPE C) SHALL BE USED IN LANE CLOSURES AS PER THE OHIO MANUAL.

5. ALL TRENCHES WITHIN THE ROAD RIGHT OF WAY SHALL BE BACKFILLED OR SECURELY PLATED PER (CITY OF COLUMBUS GENERAL POLICY ON STEEL PLATE USAGE DATED 11/15/2006 AND STD. DWG. 1441, LATEST EDITION) DURING NON-WORKING HOURS.

6. ALL EXISTING TRAFFIC LANES SHALL BE FULLY OPEN TO TRAFFIC AT ALL TIMES ON:_____.

7. ALL TRAFFIC LANES SHALL BE FULLY OPEN TO TRAFFIC FROM 6:00 A.M. TO 9:00 A.M. AND 4:00 P.M. TO 6:00 P.M., OR 6:00 TO 9:00 A.M. AND 3:00 TO 6:00 P.M. IN THE COLUMBUS BUSINESS DISTRICT (CBD) PARKING AREA, MONDAY THROUGH FRIDAY ON _____. _____LANE(S) MAY BE CLOSED TO TRAFFIC DURING WORKING HOURS.

8. ONE-WAY _____ LANE(S) OF TRAFFIC SHALL BE MAINTAINED AT ALL TIMES ON:_____.

9. TWO-WAY, TWO-LANE (ONE-LANE EACH DIRECTION) TRAFFIC SHALL BE MAINTAINED AT ALL TIMES BY USE OF EXISTING, PROPOSED, OR TEMPORARY PAVEMENT PER CITY OF COLUMBUS MAINTENANCE OF TRAFFIC, STANDARD CONSTRUCTION DRAWING 1510 AND FIGURE 6H-32 TYPICAL APPLICATION 32 (TA-32) OF THE OHIO MANUAL OF UNIFORM TRAFFIC CONTROL DEVICES.

10. TWO-WAY, ONE-LANE TRAFFIC MAY BE MAINTAINED DURING CONSTRUCTION OPERATIONS ON _____, PER THE CITY OF COLUMBUS MAINTENANCE OF TRAFFIC, STANDARD CONSTRUCTION DRAWING 1550 AND FIGURE 6H-10 (TA-10) OF THE OHIO MANUAL OF UNIFORM TRAFFIC CONTROL DEVICES.

11. _____ MAY BE CLOSED BETWEEN _____ AND _____ FOR A MAXIMUM OF ____ HOUR(S)/DAY(S) BETWEEN THE HOURS OF ____ AND _____ PER THE CITY OF COLUMBUS MAINTENANCE OF TRAFFIC, STANDARD CONSTRUCTION DRAWING 1540 AND FIGURE 6H-20 (TA-20) OF THE OHIO MANUAL AND/OR APPROVED BY THE DEPARTMENT OF PUBLIC SERVICE. THE CONTRACTOR SHALL BE RESPONSIBLE FOR ALL COSTS IN PROVIDING DETOUR INCLUDING THE REMOVAL AND REINSTALLATION OF ANY CONFLICTING TRAFFIC CONTROL AND/OR ANY NECESSARY TRAFFIC SIGNAL WORK.

12. A TEMPORARY DIVERSION SHALL BE PROVIDED AND MAINTAINED IN GOOD CONDITION ON _____ DURING THE PERIOD OF WORK. ALL SUCH DIVERSIONS SHALL BE IN ACCORDANCE WITH THE OHIO MANUAL OF UNIFORM TRAFFIC CONTROL DEVICES.

13. THE DEPARTMENT OF PUBLIC SERVICE WILL REMOVE OR COVER ALL PARKING METER HEADS PUT OUT OF SERVICE BY THIS PROJECT. THERE IS A $60.00 DOLLAR CHARGE FOR THE REMOVAL AND REINSTALLATION OF EACH METER. IN ADDITION, A DAILY METER FEE WILL BE CHARGED FOR ALL ENFORCEMENT HOURS FOR EACH METER TAKEN OUT OF SERVICE. SEE THE PARKING METER OUT OF SERVICE FEES NOTE FOR MORE INFORMATION AND THE CALCULATION OF METERS TAKEN OUT OF SERVICE, PLUS THE METER POST AND CORE NOTE. THESE CHARGES WILL BE COLLECTED FROM THE CONTRACTOR IN ADVANCE WITH THE ISSUANCE OF THE STREET OCCUPANCY/EXCAVATION PERMIT FROM THE DEPARTMENT OF PUBLIC SERVICE'S PERMIT OFFICE (614-645-7497). PARKING SERVICES SHALL BE NOTIFIED A MINIMUM OF FORTY-EIGHT (48) HOURS (EXCLUDING SAT, SUN, & HOLIDAYS) PRIOR TO BEGINNING WORK. CALL 614-645-4072.

14. FOR MOBILE PAYMENT ONLY ZONES, PLEASE REVIEW THE POSTED MOBILE PAYMENT ZONE SIGN AND PROVIDE THE MOBILE PAYMENT ZONE NUMBER FOR THE PARKING SPACE(S) THAT WILL BE REMOVED FROM SERVICE. IF "TICK-MARKS" ARE INCLUDED WITHIN THE PARKING ZONE, THEN COUNT THE NUMBER OF SPACES NEEDED TO BE OUT OF SERVICE. IF NO "TICKMARKS" ARE WITHIN THE PARKING ZONE, THEN CALCULATE THE NUMBER OF "SPACES" NEEDED BY USING 20 FEET PER SPACE. ONCE ALL THE INFORMATION LISTED ABOVE HAS BEEN COLLECTED FOR THE PAID PARKING TO BE REMOVED FROM SERVICE, CONTACT THE CITY OF COLUMBUS, DIVISION OF PARKING SERVICES AT PARKINGSERVICES@COLUMBUS.GOV FOR ASSISTANCE WITH ESTIMATING THE DAILY PAID PARKING REVENUE RATE. PROVIDE THE PROJECT LOCATION IN THE SUBJECT LINE OF THE EMAIL. PLEASE NOTE, IN THE SPRING/SUMMER OF 2020, THE ONLINE METER MAP WILL ALSO INCLUDE THE HOURLY RATE FOR MOBILE PAYMENT ZONES. THIS COST IS TO BE INCLUDED IN THE BID FOR THIS PROJECT AS A PART OF ITEM 614 MAINTENANCE OF TRAFFIC, LUMP SUM. AT THE TIME THE CONTRACTOR SUBMITS FOR THE STREET OCCUPANCY/EXCAVATION PERMIT, ALONG WITH THE PAID PARKING IDENTIFICATION NUMBERS TO BE INCLUDED ON THE PERMIT REQUEST FORM, THE CONTRACTOR IS TO PROVIDE A LISTING OF THE METER IDENTIFICATION NUMBERS AND/OR MOBILE PAYMENT ONLY ZONE NUMBERS AND THE NUMBER OF DAYS THAT EACH PAID PARKING SPACE IS TO BE OUT OF SERVICE, TO THE DEPARTMENT OF PUBLIC SERVICE PERMIT OFFICE. THE PERMIT OFFICE WILL VERIFY THAT THE HOURLY RATES ARE CORRECT AND CALCULATE THE COST OF THE PERMIT.

15. TEMPORARY "EMERGENCY NO PARKING" SIGNS SHALL BE INSTALLED BY THE CONTRACTOR IN AREAS WITH NO PARKING METERS AND TO REMOVE PARKING FROM SERVICE IN AREAS WHERE PARKING METERS, KIOSKS, AND OR MOBILE PAYMENT ZONE(S) PARKING HAS BEEN TAKEN OUT OF SERVICE. THE SIGNS SHALL SHOW THE PERMIT NUMBER, INSTALLATION DATE, WORKING DATES, AND HOURS OF RESTRICTION ON EACH SIGN. SIGNS SHALL BE POSTED AT 50' C/C MINIMUM BY USE OF ANY OF THE FOLLOWING ITEMS: EXISTING SIGN POSTS, EXISTING UTILITY POLES, DRUMS AND/OR 42" CONES and REMOVED BY THE CONTRACTOR IN AREAS WITH NO PARKING METERS. THE TEMPORARY SIGN(S) SHALL HAVE THE INSTALLATION DATE, WORKING DATES, AND HOURS OF RESTRICTION SHOWN ON EACH SIGN. THESE SIGNS MAY BE OBTAINED FROM THE DEPARTMENT OF PUBLIC SERVICE'S PERMIT OFFICE. THE POLICE DIVISION REQUIRES THE "EMERGENCY NO PARKING" SIGNS BE POSTED A MINIMUM OF SEVENTY-TWO (72) HOURS PRIOR TO ANY VEHICLES BEING TOWED. WITHIN TWENTY-FOUR (24) HOURS OF POSTING, THE CONTRACTOR SHALL SUPPLY THE DEPARTMENT OF PUBLIC SERVICE WITH A WRITTEN RECORD OF POSTED LOCATIONS (FAX: 614-645-3298).

16. THE CONTRACTOR SHALL CONTACT OHIO UTILITY PROTECTION SERVICE (OUPS), NOW "OHIO 811", TO LOCATE AND MARK ALL UNDERGROUND TRAFFIC CONTROL CABLES PRIOR TO THE BEGINNING OF ANY WORK WITHIN 450 FEET OF ANY SIGNALIZED INTERSECTION(S) OR WITHIN ANY POSTED AREA WHERE THE DEPARTMENT HAS UNDERGROUND CABLE. THE SIGNAL OPERATION ENGINEER 614-645-6418 SHALL BE NOTIFIED SIX (6) WEEKS IN ADVANCE FOR SIGNAL REVISIONS OR POLE RELOCATIONS.

17. THE CONTRACTOR SHALL CONTACT THE DIVISION OF REFUSE COLLECTION, OPERATIONS MANAGER MICHAEL PICKARD, 614-645-1675.

18. NO EXCAVATION SHALL BE MADE WITHIN FIVE (5) FEET OF ANY FOUNDATION THAT SUPPORTS SIGNAL POLES, TRAFFIC SIGNAL DISPLAYS OR SIGNS BY MAST ARM OR SIGNAL SPAN. EXCAVATION WITHIN EIGHT (8) FEET, BUT MORE THAN FIVE (5) FEET SHALL REQUIRE ADDITIONAL SUPPORT (DOWN GUY, HEAD GUY, BASE GUY, ETC.). THE CONTRACTOR SHALL CONTACT SIGNAL OPERATION PERSONNEL AT 614-645-0423 (CELL 614-419-4501) AT LEAST FORTY-EIGHT (48) HOURS (EXCLUDING SAT. & SUN.) PRIOR TO THE BEGINNING OF SUCH EXCAVATION SO THAT THE CITY CAN APPROVE THE STABILIZATION SETUP BY THE CONTRACTOR. IF UNABLE TO MAKE CONTACT THROUGH ABOVE NUMBERS, CALL 614-645-7393. STABILIZATION WILL BE DONE BY THE CONTRACTOR AT THE OWNERS'/CONTRACTING AGENCY'S EXPENSE.

19. SIGNAL CONDUIT CLEARANCE 3' HORIZONTAL AND 1' VERTICAL FROM ADJACENT UTILITIES SHALL BE MAINTAINED AT ALL TIMES.

20. WHEN ANY TRAFFIC CONTROL DEVICE, CONDUIT, OR CABLE IS DAMAGED, THE CONTRACTOR SHALL NOTIFY SIGNAL OPERATION PERSONNEL AT 614-645-0423 (CELL 614-419-4501) BETWEEN 7:00 AM AND 4:00 PM, MONDAY THROUGH FRIDAY. IF UNABLE TO MAKE CONTACT THROUGH THE OTHER NUMBERS, CALL 614-645-7393.

21. THE ROADWAY OR ANY SECTION OF ROADWAY SHALL NOT BE OPENED TO NON-CONSTRUCTION TRAFFIC UNTIL ALL TEMPORARY, NON-REFLECTIVE, BLACKOUT TAPE HAS BEEN COMPLETELY REMOVED FROM NON-CONFLICTING PERMANENT PAVEMENT MARKINGS FOR THAT AREA OF THE ROADWAY, OR UNLESS OTHERWISE DIRECTED IN WRITING BY THE ENGINEER. THIS IS SUPPLEMENTAL TO CITY OF COLUMBUS, CMS-614.11- G, AND SHALL BE PAID FOR THROUGH THE 614-LUMP SUM.

22. WHENEVER YELLOW CENTERLINES OR TURN-LANE LINES ARE PAVED OVER, REMOVED, OR OTHERWISE UNSERVICEABLE, THE CONTRACTOR SHALL INSTALL CLASS II TEMPORARY STRIPING
(MINIMUM 4' LONG SEGMENTS). TEMPORARY PAINT SHALL BE USED ON ALL MILLED
SURFACES. TEMPORARY TAPE SHALL BE USED ON ALL FINAL COURSES OF ASPHALT. PAINT OR
TAPE MAY BE USED ON INTERMEDIATE COURSES OF ASPHALT. IF APPROVED BY THE ENGINEER, DRUMS WITH STEADY BURNING TYPE C OR TYPE D 360 DEGREE WARNING LIGHTS AND "KEEP RIGHT" SIGNS MAY BE SUBSTITUTED FOR CENTERLINE MARKINGS.

23. CLASS II TEMPORARY STRIPING (MINIMUM 4' LONG SEGMENTS) SHALL BE AS PER ITEM 614 - WORK ZONE PAVEMENT MARKING AND SHALL BE PLACED WITHIN ONE (1) FOOT
LONGITUDINAL TOLERANCE OF THE PERMANENT STRIPE(S). ALL TEMPORARY STRIPING NOT TO
WITHIN ONE (1) FOOT TOLERANCE SHALL BE REMOVED AND REPLACED IN THE PROPER LOCATION BY THE CONTRACTOR. CLASS II TEMPORARY STRIPING SHALL BE OF THE APPROPRIATE COLOR AND SPACED A MAXIMUM OF FORTY (40) FEET CENTER TO CENTER.

EXISTING PERMANENT TRAFFIC CONTROL (NOTES REQUIRED ON ALL PROJECTS)

1. ANY WORK DONE BY THE DEPARTMENT OF PUBLIC SERVICE, INCLUDING INSTALLATION, RELOCATION, REMOVAL AND/OR REPLACEMENT OF PERMANENT TRAFFIC CONTROL DEVICES AS A RESULT OF WORK DONE BY THE CONTRACTOR OR AS A RESULT OF NEGLIGENCE OF THE CONTRACTOR, SHALL BE AT THE CONTRACTORS' EXPENSE.

2. THE CONTRACTOR SHALL BE RESPONSIBLE FOR REINSTALLATION AND/OR REPLACEMENT OF ALL PERMANENT TRAFFIC CONTROL DEVICES DAMAGED OR REMOVED DURING CONSTRUCTION. PERMANENT TRAFFIC CONTROL NO LONGER IN CONFLICT WITH TEMPORARY TRAFFIC CONTROL SHALL BE REPLACED IMMEDIATELY.

3. THE CONTRACTOR SHALL REPLACE ALL PAVEMENT MARKINGS, INCLUDING RAISED PAVEMENT MARKERS (RPM) SHOWN IN CONFLICT, REMOVED DUE TO CONSTRUCTION OR MAINTENANCE OF TRAFFIC SET UP, DESTROYED, OR RENDERED UNSERVICEABLE BY THE PROJECT ENGINEER OR THE PUBLIC SERVICE PAVEMENT MARKING MANAGER. ALL PAVEMENT MARKING MATERIALS SHALL BE REPLACED IN-LIKE KIND IF NOT SHOWN IN THE PLAN OR PERMIT INCLUDING RAISED PAVEMENT MARKERS. ALL PAVEMENT MARKINGS SHALL BE REPLACED IN FULL. NO PARTIAL LENGTH OR SECTIONS OF PAVEMENT MARKINGS SHALL BE REPLACED WITHOUT REMOVING THE ENTIRE MARKING BY USE OF THE WATER BLAST METHOD. REMOVAL BY ABRASIVE WHEEL GRINDING SHALL ONLY BE APPROVED BY THE PUBLIC SERVICE PAVEMENT MARKING MANAGER.

ASBUILT CHANGES / REVISIONS

DATE	DESCRIPTIONS
—	—
—	—
—	—
—	—
—	—

OHIO Utilities Protection SERVICE
Call Before You Dig
1-800-362-2764
OR 8-1-1
CALL TWO WORKING DAYS BEFORE YOU DIG
(NON MEMBERS MUST BE CALLED DIRECTLY)

6040 COLLINGS DR.

DESIGNER: K. KHAY

everstream®
FASTER FIBER. BETTER BUSINESS.®

INFORMATION IN THIS DOCUMENT IS PROPRIETARY AND CONFIDENTIAL AND SHALL NOT BE USED, COPIED, REPRODUCED, OR DISCLOSED WITHOUT PRIOR WRITTEN CONSENT OF EVERSTREAM

PLANS PREPARED BY:
NEESAI CAD DESIGNS
Drawing Information: Facility locations are general in nature and are only intended for approximate location reference. Neesai CAD Designs will not be held liable for the accuracy and will not assume responsibility for any damages resulting from these drawings.

LEGEND

E/P = EX. EDGE OF PAVEMENT		OHF = PROP. OVERHEAD FIBER	
C/L = EX. CENTER LINE		B = PROP. BURIED FIBER	
R/W = EX. RIGHT OF WAY		P/L = EX. PROPERTY LINE	

PROPOSED ANCHOR & GUY	PROPOSED HANDHOLE
FOREIGN/EXISTING ANCHOR & GUY	EXISTING HANDHOLE
AERIAL STORAGE LOOP	STORM DRAIN
BURIED STORAGE LOOP	FIRE HYDRANT

SCALE: NONE

SHEET: 3 OF 22

EXISTING PERMANENT TRAFFIC CONTROL (IF APPLICABLE, FOR USE ON A PER PROJECT BASIS)

1. ALL OVERHEAD CABLE, AND DOWN GUYS OR BACK GUYS SHALL NOT BLOCK ANY PORTION OF A TRAFFIC SIGNAL, TRAFFIC CONTROL SIGN, OR OTHER TRAFFIC CONTROL DEVICE SUCH THAT VISIBILITY OR OPERATION OF THE TRAFFIC CONTROL DEVICE IS IMPAIRED.

2. ALL PERMANENT PAVEMENT MARKINGS AND TRAFFIC CONTROL SIGNS AS SHOWN ON THIS PLAN SHALL BE INSTALLED BY THE CONTRACTOR AT THE PROJECTS EXPENSE. THE PROJECT ENGINEER SHALL BE NOTIFIED TO DIRECT APPROPRIATE PERSONNEL A MINIMUM OF FORTY-EIGHT (48) HOURS (EXCLUDING SAT. & SUN.) PRIOR TO THE INSTALLATION OF PERMANENT MARKINGS TO INSPECT AND APPROVE THE PAVEMENT MARKING LAYOUT PRIOR TO PLACING THE PERMANENT MARKINGS.

3. PERMANENT STRIPING OR CLASS I TEMPORARY STRIPING SHALL BE INSTALLED NO LATER THAN FOURTEEN (14) CALENDAR DAYS AFTER THE FINAL PAVING COURSE IS COMPLETED. THE PAVING CONTRACTOR SHALL BE RESPONSIBLE TO NOTIFY THE STRIPING CONTRACTOR TO INSURE THE PERMANENT STRIPING IS INSTALLED WITHIN THE FOURTEEN (14) CALENDAR DAY LIMIT.

4. IF THE DEPARTMENT OF PUBLIC SERVICE IS TO INSTALL PERMANENT STRIPING, THE PROJECT ENGINEER SHALL BE NOTIFIED TO DIRECT APPROPRIATE PERSONNEL A MINIMUM OF TEN (10) WORKING DAYS PRIOR TO THE APPLICATION OF THE FINAL COURSE OF PAVEMENT.

5. **AT ANY LOCATION WHERE THE CONTRACTOR DAMAGES DETECTORS AND/OR THEIR LEAD-IN CABLES THE CONTRACTOR SHALL REPLACE THEM. AT ANY LOCATION WHERE DETECTION IS CHANGED FROM MAG PROBE UNITS TO LOOPS, THE CONTRACTOR SHALL REPLACE THE PROBE LEAD-IN WITH LOOP LEAD-IN CABLE. ALL REPAIRS TO DETECTION SHALL BE COMPLETED WITHIN 21 DAYS FROM DAMAGE TO DETECTION ON A PER INTERSECTION BASIS. IF THE 21DAY REPAIR REQUIREMENT CANNOT BE SATISFIED AT ANY LOCATION WHERE THE CONTRACTOR DAMAGES DETECTORS AND/OR THEIR LEAD-IN CABLES, THE CONTRACTOR, AT THE DISCRETION OF SIGNAL OPERATIONS PERSONNEL, MAY BE REQUIRED TO INSTALL A VERSICAM FLEX CAMERA SYSTEM, A WAVETRONIX RADAR SYSTEM, OR TEMPORARY LOOP DETECTION. ANY CONTRACTOR FAILING TO COMPLY WITH THESE GUIDELINES SHALL BE SUBJECT TO PENALTY TO THE SUM OF $100.00 PER DAY FOR EACH DAY BEYOND THE 21 DAY REPAIR PERIOD ON A PER INTERSECTION BASIS, UNTIL CONDITIONS ARE MET TO THE SATISFACTION OF THE SIGNAL OPERATIONS PERSONNEL. THIS PENALTY DEDUCTION SHALL BE SPECIFIC FOR EACH SIGNALIZED INTERSECTION EFFECTED BY THIS PROJECT AND SEPARATE FROM ANY LIQUIDATED DAMAGES FOR THE PROJECT AS A WHOLE. THE WORK TO INSTALL THE DETECTION SHALL CONFORM TO THE CITY OF COLUMBUS STANDARD DRAWING 4300 AND THE CITY OF COLUMBUS CONSTRUCTION AND MATERIAL SPECIFICATIONS, LATEST EDITION, WITH THE FOLLOWING PROVISIONS:**

   a) **THE CONTRACTOR SHALL PROVIDE THE DEPARTMENT OF PUBLIC SERVICE'S INSPECTOR, PRIOR TO THE COMMENCEMENT OF WORK, THE IMSA (INTERNATIONAL MUNICIPAL SIGNAL ASSOCIATION CERTIFICATION PAPERS FOR ALL SIGNAL TECHNICIANS WORKING ON THIS PROJECT.**

   b) **LOCATIONS OF THE REPLACEMENT DETECTION SHALL BE FIELD MARKED OR DIMENSIONED DRAWINGS SHALL BE SUBMITTED TO THE CONSTRUCTION SECTION BY DEPARTMENT OF PUBLIC SERVICE PERSONNEL. LOCATION OF FINAL PAVEMENT MARKINGS OR THE MARKINGS THEMSELVES SHALL BE CLEARLY INDICATED ON THE ASPHALT PRIOR TO DETECTOR LOCATIONS BEING MARKED. THE CONTRACTOR SHALL LAYOUT THE LOOPS ON THE PAVEMENT IF DRAWINGS ARE SUBMITTED. IF DRAWINGS HAVE NOT BEEN PROVIDED, CONTACT SIGNAL OPERATIONS PERSONNEL AT 614-645-0423 (CELL 614-419-4501) AT LEAST TWO WORKING DAYS PRIOR TO NEEDING THE LOCATION MARKED. IF UNABLE TO MAKE CONTACT THROUGH THE ABOVE NUMBERS, CALL 614-645-7393.**

   c) **THE SAW SLOT DEPTH FOR LOOP WIRE INSTALLATION SHALL BE FOUR (4) INCHES WITH SIX (6) INCHES AT THE CONDUIT ENTRANCE. IF ADVERSE PAVEMENT CONDITIONS WARRANT, DEPTH MAY BE INCREASED TO SIX (6) INCHES THROUGHOUT AND SHALL BE DETERMINED BY THE DEPARTMENT OF PUBLIC SERVICE INSPECTOR.**

   d) **EACH LOOP SHALL HAVE ITS OWN CONDUIT FROM EDGE OF PAVEMENT TO PULL BOX UNLESS SPECIFIED OTHERWISE BY THE DEPARTMENT OF PUBLIC SERVICE INSPECTOR.**

   e) **THE PULLBOX ASSEMBLY SHALL BE RATED AS MEDIUM TO HEAVY DUTY, TO BE INSTALLED IN CONCRETE WALKWAYS, AND SHALL HAVE ALL STAINLESS STEEL HARDWARE. THE PULLBOX COVER SHALL HAVE THE WORD "TRAFFIC" ON IT. THE COVER SHALL BE BOLTED TO THE BOX AND SHALL BE POLYMER CONCRETE. THE COVER PLUS HOUSING AS A UNIT SHALL BE RATED TO WITHSTAND A MINIMUM 20,000 LB. STATIC LOAD OVER A 10"X10" AREA AS PER ASTM C-857. THE BOX DEPTH SHALL BE 15 INCHES MINIMUM TO 30 INCHES MAXIMUM. IF THE PROJECT DOES NOT SPECIFY 725.06 POLYMER CONCRETE PULL BOXES, THE SUPPLIED ASSEMBLIES SHALL BE AS FOLLOWS: CDR SYSTEMS MODEL SA32-1015-18, OR SYNERTECH MODEL S1118B18FA. SIX (6) INCHES OF #57 AGGREGATE SHALL BE PLACED AT THE BOTTOM OF THE PULLBOX. NO CONDUIT SHALL PROTRUDE MORE THAN THREE (3) INCHES INSIDE THE PULLBOX. CONDUIT ELLS OR EXTENSIONS MAY BE USED TO ALIGN THE CONDUIT WITH THE HOUSING. THE COST FOR EXTENSIONS OR ELLS IF NEEDED SHALL BE INCIDENTAL TO THE PER UNIT PRICE.**

   f) **WHEN A PULLBOX IS NOT USED, THE SOLDERED SPLICE SHALL BE MADE IN AN ANCHOR BASE STRAIN POLE OR A CONDUIT RISER SPECIFIED BY THE DEPARTMENT OF PUBLIC SERVICE'S REPRESENTATIVE, EXCEPT WHERE A CONTROLLER CABINET IS MOUNTED ON THAT POLE IN WHICH CASE THE LOOP WIRE SHALL BE ROUTED DIRECTLY INTO THE CABINET.**

   g) **THE CONTRACTOR SHALL NOT MAKE ANY WIRING CONNECTIONS OR ADJUSTMENTS INSIDE THE CONTROL CABINET. WHEN SUCH CONNECTIONS ARE REQUIRED, THE CONTRACTOR SHALL NOTIFY THE TRAFFIC OPERATIONS SHOP 614-645-7393, MON.- FRI., 8 AM TO 4 PM, TO SCHEDULE CITY FORCES FOR MAKING THE ACTUAL CONNECTIONS. THE CONTRACTOR SHALL BE AVAILABLE AT THE AGREED TIME. THE CONTRACTOR WILL BE BILLED FOR ANY TIME THAT CITY FORCES ARE REQUIRED TO WAIT FOR THE CONTRACTORS' WORK TO BE COMPLETED.**

   h) **CONDUIT PLACED IN "RIGHT OF WAY" AREAS BEARING NO TRAFFIC FOR DETECTOR LEAD IN SHALL BE ITEM 725.051, CITY OF COLUMBUS CONSTRUCTION AND MATERIAL SPECIFICATIONS, LATEST EDITION. CONDUIT PLACED UNDER A ROADWAY OR IN AREAS THAT MAY BEAR TRAFFIC SHALL BE CONCRETE ENCASED (SIZES AND TYPE TO BE DETERMINED BY THE DEPARTMENT OF PUBLIC SERVICE'S REPRESENTATIVE. ALL CONDUITS SHALL BE PLACED AT A MINIMUM DEPTH OF 24".**

   i) **LOOP WIRE SHALL BE IDENTIFIED WITH A PLASTIC TAG (WBLT, EBRT, ETC.) AT THE SPLICE POINT OR AT ENTRANCE TO THE CABINET IF LEAD-IN CABLE IS NOT USED.**

   j) **THE ITEMS AND ESTIMATED QUANTITIES FOR THE REPLACEMENT OF THE DEPARTMENT OF PUBLIC SERVICE'S DETECTION ITEMS SHALL BE INCLUDED IN THESE PLANS WHEN DIRECTED BY THE PLAN REVIEWER. THESE ESTIMATES ARE FOR THE PURPOSE OF BIDDING THE PROJECT. THE FOLLOWING IS A LIST OF THE ITEMS AND QUANTITIES PROJECTED FOR USE IN DETECTOR REPLACEMENT FOR THIS PROJECT:**

ITEM	QUANTITY	UNIT	ITEM DESCRIPTION
202		SF	WALK REMOVED
608		SF	4" CONCRETE WALK
632		LF	CONDUIT RISER, 1 OR 2 INCH DIAMETER
625		LF	CONDUIT 1, 1 1/2, OR 2 INCH (AS PER PLAN)
625		LF	TRENCH
625		EACH	PULLBOX
632		EACH	DETECTOR LOOP
632		LF	LOOP DETECTOR LEAD-IN CABLE
632		LF	LASH / UNLASHED CABLE

THE CONTRACTOR SHALL NOTIFY SIGNAL OPERATION PERSONNEL AT 614-645-0423 (CELL 614-419-4501) AFTER ALL LOOPS HAVE BEEN INSTALLED AT EACH INTERSECTION. IF UNABLE TO MAKE CONTACT THROUGH THE ABOVE NUMBER, CALL 614-645-7393. THE DEPARTMENT OF PUBLIC SERVICE SHALL INSPECT ALL SENSORS AND TEST AS NECESSARY. THE CONTRACTOR SHALL REPLACE ALL LOOPS NOT MEETING SPECIFICATIONS.

MOT PERMIT NOTES

1. PERMIT MOT / TTC - SUBMITTAL

a.STANDARD DRAWINGS - ONLY COLUMBUS 1500-1550 WILL BE ACCEPTED FOR USE MOT / TTC ON PERMITS.

b.SITE SPECIFIC
REQUIRED - WHEN WORK ZONE IMPACTS A SIGNALIZED INTERSECTION.
REQUIRED - WHEN WORK AREA IN THE CENTRAL BUSINESS DISTRICT.
REQUIRED - WHEN REQUESTED BY MOT PERMIT REVIEW.
REQUIRED - LAW ENFORCEMENT OFFICER (LEO) AT SIGNALIZED INTERSECTIONS.

2. MASS TRANSIT AND RIDE SHARE

a.COTA BUS STOPS
SHALL CONTACT PRIOR TO START - PAUL EVANS - COTA SERVICE PROGRAM MANAGER (614) 308-4373 evanspm1@cota.com.
THIRTY DAYS - ANY CLOSURE WHICH CREATES DELAY OR DETOUR ON ASSIGNED ROUTES REQUIRES A TEMPORARY RELOCATION.
24 HOURS - PRIOR TO START OF CONSTRUCTION WITHIN 300' OF COTA ASSETS IN THE RIGHT OF WAY.
IMMEDIATELY - IN EVENT OF UNPLANNED WORK AFFECTING COTA BUS STOPS.

b.COTA ASSETS
SHALL CONTACT PRIOR TO START - PAUL EVANS - COTA SERVICE PROGRAM MANAGER (614) 308-4373 evanspm1@cota.com.
SHALL KEEP OPEN ALL STOPS & STATIONS IN WORK ZONE IF RELOCATION IS NOT REQUIRED BY COTA PROGRAM SERVICES MANAGER.

c.COGO - RIDE SHARE BIKE CHARGING STATIONS
SHALL CONTACT PRIOR TO START - CHET RIDENOUR - COGO BIKE SHARE OPERATIONS MANAGER (614) 506-8100 cridenour@lyft.com.
THIRTY DAYS - IF CLOSURE IMPACTS COGO BIKE STATION, LIMITS PUBLIC ACCESS DURING CONSTRUCTION.
24 HOURS - PRIOR TO START OF CONSTRUCTION WITHIN 300' OF COGO ASSETS.
IMMEDIATELY - IN EVENT OF UNPLANNED WORK AFFECTING COGO/LIFT ASSETS

3. BIKES AND PEDESTRIANS

a.BIKE LANE CLOSURE
WHEN A BIKE LANE PAVEMENT MARKING EXIST AND MUST BE INCLUDED IN THE MOT / TTC PLAN.
REFERENCE - MOT SHEET 1500 ADVANCE WARNING SIGNS WHEN CLOSING THE BIKE LANE AND MERGING BIKES.
REFERENCE - MOT SHEET 1500 TABLE 4 ADVANCE WARNING SIGN SPACING.
REQUIRED - ONE (1) SHARE THE ROAD SIGN MID-TAPER WHEN NO BIKE LANE BUT SHARROWS ONLY EXIST.

b.SIDEWALKS / CROSSWALKS
THE CONTRACTOR:
SHALL NOT CLOSE OPPOSING SIDEWALKS OR CROSSWALKS SIMULTANEOUSLY.
SHALL KEEP SIDEWALKS & CROSSWALKS BEYOND THE ACTIVE WORK AREA OPEN AT ALL TIMES.
SHALL PLACE R9-9 SIGNS EACH END OF THE ACTIVE WORK AREA.
SHALL PLACE R9-11 SIGNS AT THE NEAREST ADA CROSSWALKS BEYOND THE ACTIVE WORK AREA.
Note: "Sidewalks" defined ANY area within the right of way used by pedestrians.

4. PARKING

a.DRIVEWAYS
THE CONTRACTOR:
SHALL PROVIDE 72 HOURS ADVANCE NOTICE WHEN CLOSING DRIVEWAYS.
SHALL RESTORE ACCESS FOLLOWING END OF WORK THAT DAY AND MAINTAIN AREA IN COMPLIANCE WITH ADA REQUIREMENTS.
SHALL MONITOR OBSTRUCTED DRIVEWAYS AND RESPONSIBLE TO MAINTAIN ACCESS AS NEEDED.

b.ON STREET
THE CONTRACTOR:
SHALL CONTACT PARKING ENFORCEMENT (614) 645-4072 48 HOURS IN ADVANCE WHEN CLOSING METERED/APP PAY PARKING.
SHALL LIMIT PARKING RESTRICTIONS TO "AS NEEDED" TO SAFELY COMPLETE THE WORK.
SHALL PROVIDE 72 HOURS ADVANCE NOTICE TO RESIDENTS WHEN TEMPORARILY CLOSING ON STREET PARKING AREAS.
SHALL RESTORE ACCESS FOLLOWING END OF EACH WORK DAY.
SHALL MAINTAIN LANE WIDTH SUFFICIENT FOR VEHICLES TO SAFELY PASS THROUGH WORK AREA.
SHALL MONITOR AND ASSIST PERMITTED HANDICAP PARKING SPACES AS DEFINED BY THE ADA.

5. ADVANCE WARNING SIGNS

a.SIGNS, SIZES, SPACING, DISTANCE
THE CONTRACTOR:
SHALL PLACE SIGNS ON INTERSECTING STREETS WHEN NO ADVANCED WARNING SIGN IS SEEN PRIOR TO ENTERING THE WORK AREA.
b.SIZES < 40 MPH "LOW SPEED" AND 36" x 36 SHOULD BE USED.
c.SIZES > 45 MPH "HIGH SPEED" AND 48" x 48" SHOULD BE USED.
d.SPACING PER MOT SHEET 1500 TABLE 2.
e.DISTANCE VARIES WHEN TURN ONLY LANES EXIST. THE SPACE FROM STOP BAR TO TURN LANE PAVEMENT MARKINGS ORIGIN, CONTINUE PER TABLE 2.

6. TMC - SIGNAL TIMING, CAMERA MONITORING AND RECORDING

a.CITY OF COLUMBUS TMC - TRAFFIC MANAGEMENT CENTER (614) 645-7249
b.SIGNALS - TIMING CHANGES MAY BE REQUESTED BY SPECIAL DUTY LAW ENFORCEMENT OFFICER (LEO).
c.CAMERAS - MONITORING AND RECORDING MUST BE ARRANGED 72 HOURS IN ADVANCE.

7. SHOULDERS

a.DEFINITIONS: Edge of Pavement (EOP), Back of Curb (BOC), Face of Curb (FOC), Solid White Line (SWL), Lane of Travel (LOT)
THE CONTRACTOR:
SHALL NOT OCCUPY, BLOCK OR IMPEDE A LANE OF TRAVEL (LOT) WHILE USING A SHOULDER CLOSURE PER 6H-3 MODIFIED
SHALL PERFORM WORK BEYOND THE EDGE OF PAVEMENT (EOP), SOLID WHITE LINE (SWL), LANE OF TRAVEL (LOT), OR BACK OF CURB (BOC).
SHALL MAINTAIN A BUFFER, SAFE DISTANCE FROM THE SWL FOR TRAFFIC CONTROL DEVICE PLACEMENT ON EOP, SWL OR LOT.
SHALL PLACE R9-9 & R9-11 SIGNS FOR SIDEWALK CLOSURE & PEDESTRIAN DETOURS PER TYPICAL 6H29 FOR PEDESTRIAN SAFETY.
SHALL SECURE PERMISSION IN ADVANCE TO PARK, STORE, STAGE & SITE ACCESS

b.NOTES
Work Zone - Equipment, Staging & Storage is prohibited within 2' of the EOP, SWL, and LOT.
Traffic Conditions - Must remain normal when deploying shoulder closures.
Separation - A 2' Buffer between the work zone and lane of travel must be maintained.
Compliance - If not in compliance with the above MOT Approval is REVOKED. Cease and Contact the MOT Supervisor immediately (614) 645-0355.

8. EASEMENTS

a.EASEMENT ACCESS WITHIN PUBLIC RIGHT OF WAY
THE CONTRACTOR:
SHALL DEPLOY TRAFFIC CONTROL WHEN STAGING, STORAGE AND ACCESSING EASEMENTS.
SHALL DEPLOY PEDESTRIAN SAFETY MEASURES.

b.NOTES - Typical 1550.1 Traffic Control Plan when Accessing Easements Follow the Guidance Above

ASBUILT CHANGES / REVISIONS

DATE	DESCRIPTIONS
—	—
—	—
—	—
—	—
—	—

OHIO Utilities Protection SERVICE
Call Before You Dig
1-800-362-2764
OR 8-1-1
CALL TWO WORKING DAYS BEFORE YOU DIG
(NON MEMBERS MUST BE CALLED DIRECTLY)

6040 COLLINGS DR.

DESIGNER: K. KHAY

everstream®
FASTER FIBER. BETTER BUSINESS.®

INFORMATION IN THIS DOCUMENT IS PROPRIETARY AND CONFIDENTIAL AND SHALL NOT BE USED, COPIED, REPRODUCED, OR DISCLOSED WITHOUT PRIOR WRITTEN CONSENT OF EVERSTREAM

PLANS PREPARED BY:
NEESAI CAD DESIGNS
Drawing Information: Facility locations are general in nature and are only intended for approximate location reference. Neesai CAD Deisgns will not be held liable for the accuracy and will not assume responsibility for any damages resulting from these drawings.

LEGEND

E/P	= EX. EDGE OF PAVEMENT	OHF	= PROP. OVERHEAD FIBER		PROPOSED ANCHOR & GUY		PROPOSED HANDHOLE
C/L	= EX. CENTER LINE	B	= PROP. BURIED FIBER		FOREIGN/EXISTING ANCHOR & GUY		EXISTING HANDHOLE
R/W	= EX. RIGHT OF WAY	P/L	= EX. PROPERTY LINE		AERIAL STORAGE LOOP		STORM DRAIN
					BURIED STORAGE LOOP		FIRE HYDRANT

SCALE: NONE

SHEET: 4 OF 22

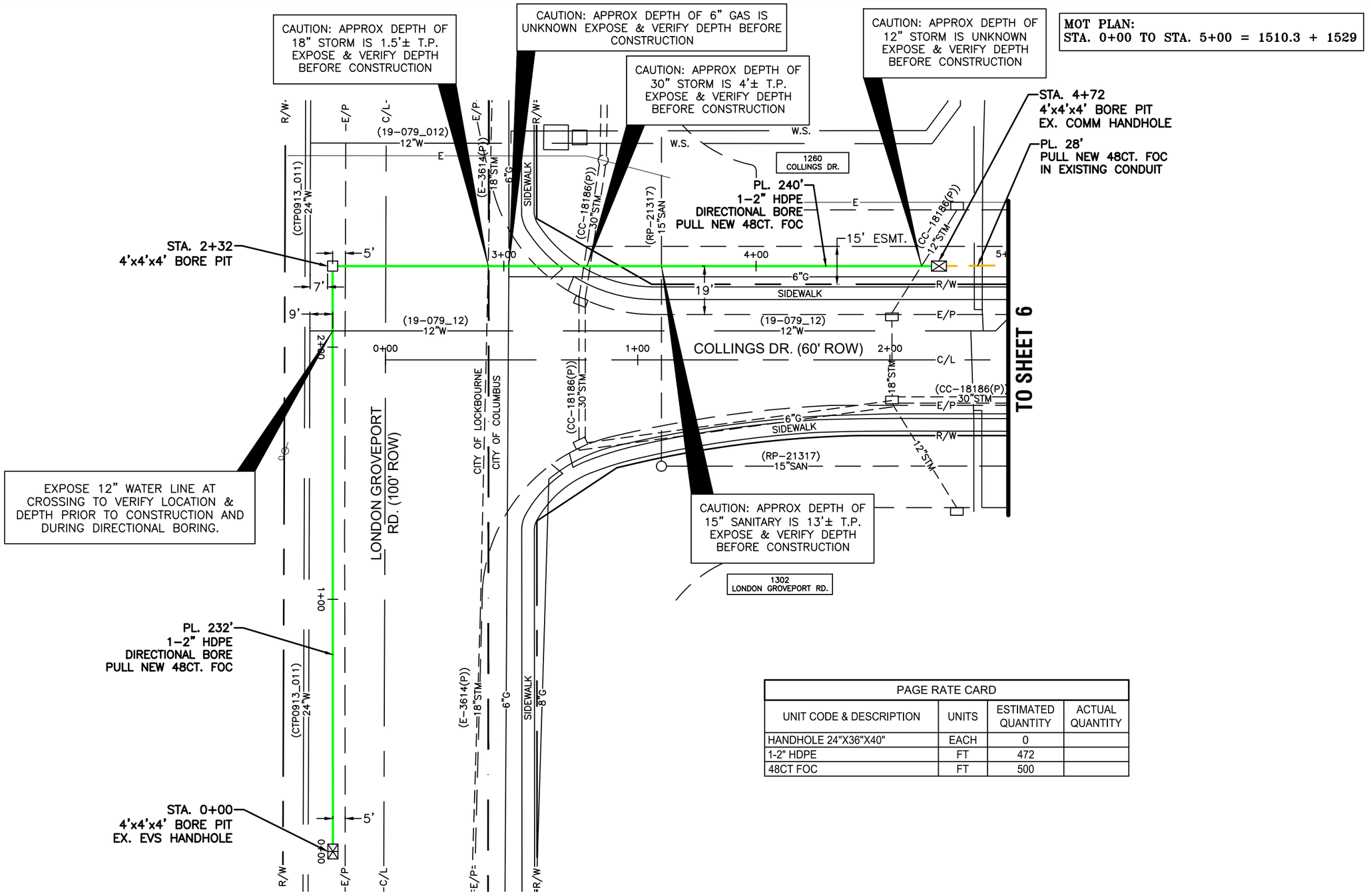

LEGEND:

- G — GAS LINE
- -SAN- — SANITARY SEWER
- STM — STORM SEWER
- W — WATER LINE
- S/L — SLUDGE LINE
- E — ELECTRIC
- TR — TRAFFIC
- TRAFFIC SIGNAL POLE
- TRAFFIC PULL BOX
- PEDESTRIAN PEDESTAL

ASBUILT CHANGES / REVISIONS

DATE	DESCRIPTIONS
–	–
–	–
–	–
–	–
–	–
–	–

PAGE RATE CARD

UNIT CODE & DESCRIPTION	UNITS	ESTIMATED QUANTITY	ACTUAL QUANTITY
HANDHOLE 24"X36"X40"	EACH	0	
1-2" HDPE	FT	472	
48CT FOC	FT	500	

OHIO Utilities Protection SERVICE
Call Before You Dig
1-800-362-2764
OR 8-1-1
CALL TWO WORKING DAYS BEFORE YOU DIG
(NON MEMBERS MUST BE CALLED DIRECTLY)

6040 COLLINGS DR.

DESIGNER: K. KHAY

SCALE BAR = 1:40
0 20 40 60 80

everstream®
FASTER FIBER. BETTER BUSINESS.®

INFORMATION IN THIS DOCUMENT IS PROPRIETARY AND CONFIDENTIAL AND SHALL NOT BE USED, COPIED, REPRODUCED, OR DISCLOSED WITHOUT PRIOR WRITTEN CONSENT OF EVERSTREAM

PLANS PREPARED BY:
NEESAI CAD DESIGNS

Drawing Information: Facility locations are general in nature and are only intended for approximate location reference. Neesai CAD Designs will not be held liable for the accuracy and will not assume responsibility for any damages resulting from these drawings.

LEGEND

- E/P = EX. EDGE OF PAVEMENT
- C/L = EX. CENTER LINE
- R/W = EX. RIGHT OF WAY
- OHF = PROP. OVERHEAD FIBER
- B = PROP. BURIED FIBER
- P/L = EX. PROPERTY LINE
- PROPOSED ANCHOR & GUY
- FOREIGN/EXISTING ANCHOR & GUY
- AERIAL STORAGE LOOP
- BURIED STORAGE LOOP
- PROPOSED HANDHOLE
- EXISTING HANDHOLE
- STORM DRAIN
- FIRE HYDRANT

HORIZ. 1" = 40'
VERT. 1" = 10'

SHEET: 5 OF 22

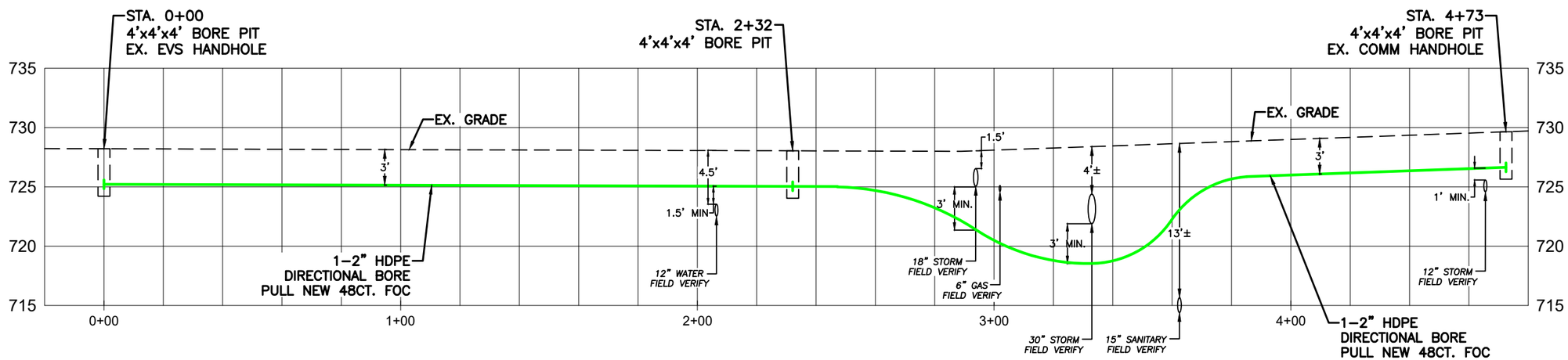

LEGEND:

—G—	GAS LINE
-SAN-	SANITARY SEWER
—STM—	STORM SEWER
—W—	WATER LINE
—S/L—	SLUDGE LINE
—E—	ELECTRIC
—TR—	TRAFFIC
	TRAFFIC SIGNAL POLE
	TRAFFIC PULL BOX
	PEDESTRIAN PEDESTAL

ASBUILT CHANGES / REVISIONS

DATE	DESCRIPTIONS
–	–
–	–
–	–
–	–
–	–
–	–

OHIO Utilities Protection SERVICE
Call Before You Dig
1-800-362-2764
OR 8-1-1
CALL TWO WORKING DAYS BEFORE YOU DIG
(NON MEMBERS MUST BE CALLED DIRECTLY)

6040 COLLINGS DR.

DESIGNER: K. KHAY

SCALE BAR = 1:40
0 20 40 60 80

everstream®
FASTER FIBER. BETTER BUSINESS.®

INFORMATION IN THIS DOCUMENT IS PROPRIETARY AND CONFIDENTIAL AND SHALL NOT BE USED, COPIED, REPRODUCED, OR DISCLOSED WITHOUT PRIOR WRITTEN CONSENT OF EVERSTREAM

PLANS PREPARED BY:
NEESAI CAD DESIGNS

Drawing Information: Facility locations are general in nature and are only intended for approximate location reference. Neesai CAD Deisgns will not be held liable for the accuracy and will not assume responsibility for any damages resulting from these drawings.

LEGEND

—E/P—	= EX. EDGE OF PAVEMENT	—OHF—	= PROP. OVERHEAD FIBER
—C/L—	= EX. CENTER LINE	—B—	= PROP. BURIED FIBER
—R/W—	= EX. RIGHT OF WAY	—P/L—	= EX. PROPERTY LINE

PROPOSED ANCHOR & GUY	PROPOSED HANDHOLE
FOREIGN/EXISTING ANCHOR & GUY	EXISTING HANDHOLE
AERIAL STORAGE LOOP	STORM DRAIN
BURIED STORAGE LOOP	FIRE HYDRANT

HORIZ. 1" = 40'
VERT. 1" = 10'

SHEET:
5A OF 22

MOT PLAN: 1550.1 + 1529

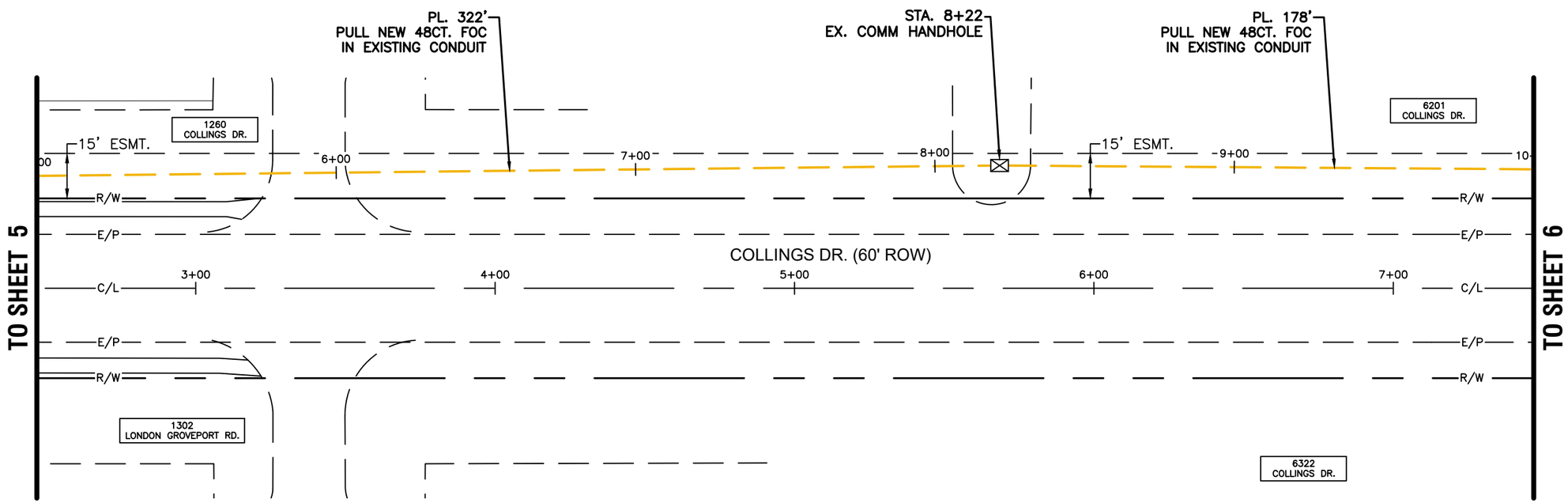

PAGE RATE CARD			
UNIT CODE & DESCRIPTION	UNITS	ESTIMATED QUANTITY	ACTUAL QUANTITY
HANDHOLE 24"X36"X40"	EACH	0	
1-2" HDPE	FT	0	
48CT FOC	FT	500	

CONTRACTOR: SEE PERMIT MOT NOTE #8 a & b – EASEMENTS

LEGEND:

- G — GAS LINE
- -SAN- — SANITARY SEWER
- STM — STORM SEWER
- W — WATER LINE
- S/L — SLUDGE LINE
- E — ELECTRIC
- TR — TRAFFIC
- TRAFFIC SIGNAL POLE
- TRAFFIC PULL BOX
- PEDESTRIAN PEDESTAL

ASBUILT CHANGES / REVISIONS

DATE	DESCRIPTIONS
–	–
–	–
–	–
–	–
–	–

OHIO Utilities Protection SERVICE
Call Before You Dig
1-800-362-2764
OR 8-1-1
CALL TWO WORKING DAYS BEFORE YOU DIG
(NON MEMBERS MUST BE CALLED DIRECTLY)

6040 COLLINGS DR.

DESIGNER: K. KHAY

SCALE BAR = 1:40
0 20 40 60 80

everstream®
FASTER FIBER. BETTER BUSINESS.®

INFORMATION IN THIS DOCUMENT IS PROPRIETARY AND CONFIDENTIAL AND SHALL NOT BE USED, COPIED, REPRODUCED, OR DISCLOSED WITHOUT PRIOR WRITTEN CONSENT OF EVERSTREAM

PLANS PREPARED BY:
NEESAI CAD DESIGNS

Drawing Information: Facility locations are general in nature and are only intended for approximate location reference. Neesai CAD Deisgns will not be held liable for the accuracy and will not assume responsibility for any damages resulting from these drawings.

LEGEND

E/P = EX. EDGE OF PAVEMENT	OHF = PROP. OVERHEAD FIBER	PROPOSED ANCHOR & GUY	PROPOSED HANDHOLE
C/L = EX. CENTER LINE	B = PROP. BURIED FIBER	FOREIGN/EXISTING ANCHOR & GUY	EXISTING HANDHOLE
R/W = EX. RIGHT OF WAY	P/L = EX. PROPERTY LINE	AERIAL STORAGE LOOP	STORM DRAIN
		BURIED STORAGE LOOP	FIRE HYDRANT

HORIZ. 1" = 40'
VERT. 1" = 10'

SHEET: 6 OF 22

MOT PLAN: 1550.1 + 1529

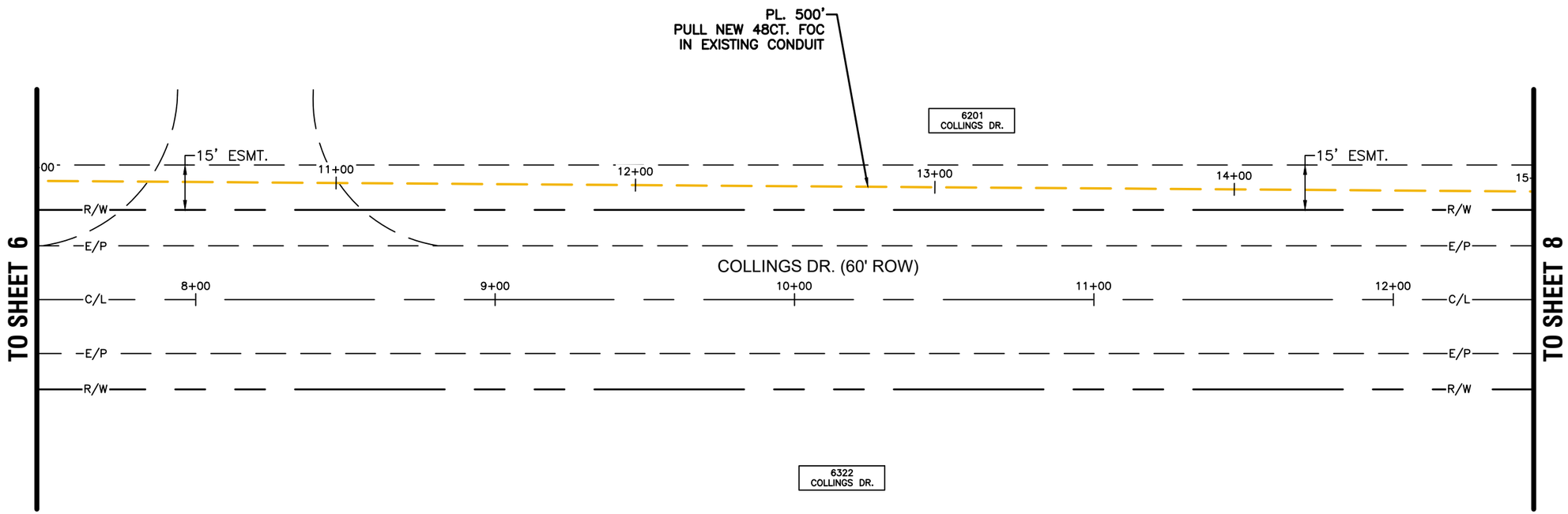

PAGE RATE CARD			
UNIT CODE & DESCRIPTION	UNITS	ESTIMATED QUANTITY	ACTUAL QUANTITY
HANDHOLE 24"X36"X40"	EACH	0	
1-2" HDPE	FT	0	
48CT FOC	FT	500	

CONTRACTOR: SEE PERMIT MOT NOTE #8 a & b – EASEMENTS

LEGEND:

- G — GAS LINE
- -SAN- — SANITARY SEWER
- STM — STORM SEWER
- W — WATER LINE
- S/L — SLUDGE LINE
- E — ELECTRIC
- TR — TRAFFIC
- TRAFFIC SIGNAL POLE
- TRAFFIC PULL BOX
- PEDESTRIAN PEDESTAL

ASBUILT CHANGES / REVISIONS

DATE	DESCRIPTIONS
–	–
–	–
–	–
–	–
–	–

OHIO Utilities Protection SERVICE
Call Before You Dig
1-800-362-2764
OR 8-1-1
CALL TWO WORKING DAYS BEFORE YOU DIG
(NON MEMBERS MUST BE CALLED DIRECTLY)

6040 COLLINGS DR.

DESIGNER: K. KHAY

SCALE BAR = 1:40
0 20 40 60 80

everstream®
FASTER FIBER. BETTER BUSINESS.®

INFORMATION IN THIS DOCUMENT IS PROPRIETARY AND CONFIDENTIAL AND SHALL NOT BE USED, COPIED, REPRODUCED, OR DISCLOSED WITHOUT PRIOR WRITTEN CONSENT OF EVERSTREAM

PLANS PREPARED BY:
NEESAI CAD DESIGNS

Drawing Information: Facility locations are general in nature and are only intended for approximate location reference. Neesai CAD Deisgns will not be held liable for the accuracy and will not assume responsibility for any damages resulting from these drawings.

LEGEND

- E/P = EX. EDGE OF PAVEMENT
- C/L = EX. CENTER LINE
- R/W = EX. RIGHT OF WAY
- OHF = PROP. OVERHEAD FIBER
- B = PROP. BURIED FIBER
- P/L = EX. PROPERTY LINE
- PROPOSED ANCHOR & GUY
- FOREIGN/EXISTING ANCHOR & GUY
- AERIAL STORAGE LOOP
- BURIED STORAGE LOOP
- PROPOSED HANDHOLE
- EXISTING HANDHOLE
- STORM DRAIN
- FIRE HYDRANT

HORIZ. 1" = 40'
VERT. 1" = 10'

SHEET: 7 OF 22

MOT PLAN: 1550.1 + 1529

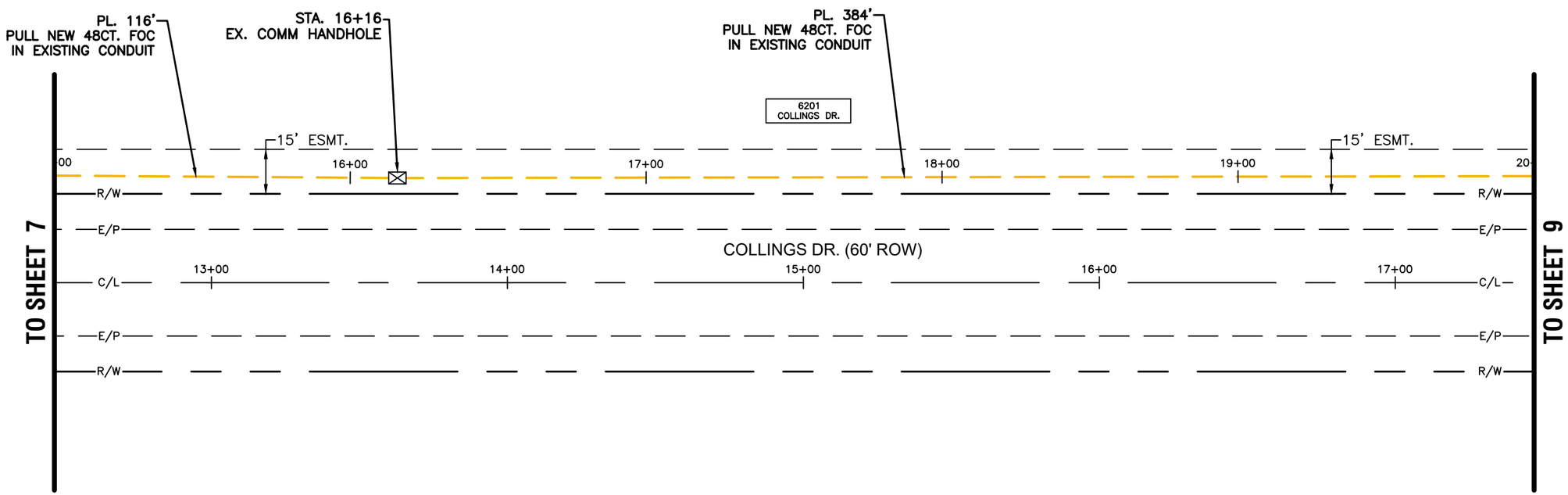

PAGE RATE CARD			
UNIT CODE & DESCRIPTION	UNITS	ESTIMATED QUANTITY	ACTUAL QUANTITY
HANDHOLE 24"X36"X40"	EACH	0	
1-2" HDPE	FT	0	
48CT FOC	FT	500	

CONTRACTOR: SEE PERMIT MOT NOTE #8 a & b – EASEMENTS

LEGEND:

- G — GAS LINE
- -SAN- — SANITARY SEWER
- STM — STORM SEWER
- W — WATER LINE
- S/L — SLUDGE LINE
- E — ELECTRIC
- TR — TRAFFIC
- TRAFFIC SIGNAL POLE
- TRAFFIC PULL BOX
- PEDESTRIAN PEDESTAL

ASBUILT CHANGES / REVISIONS

DATE	DESCRIPTIONS
–	–
–	–
–	–
–	–
–	–

OHIO Utilities Protection SERVICE
Call Before You Dig
1-800-362-2764
OR 8-1-1
CALL TWO WORKING DAYS BEFORE YOU DIG
(NON MEMBERS MUST BE CALLED DIRECTLY)

6040 COLLINGS DR.

DESIGNER: K. KHAY

SCALE BAR = 1:40
0 20 40 60 80

everstream®
FASTER FIBER. BETTER BUSINESS.®

INFORMATION IN THIS DOCUMENT IS PROPRIETARY AND CONFIDENTIAL AND SHALL NOT BE USED, COPIED, REPRODUCED, OR DISCLOSED WITHOUT PRIOR WRITTEN CONSENT OF EVERSTREAM

PLANS PREPARED BY:
NEESAI CAD DESIGNS

Drawing Information: Facility locations are general in nature and are only intended for approximate location reference. Neesai CAD Deisgns will not be held liable for the accuracy and will not assume responsibility for any damages resulting from these drawings.

LEGEND

- E/P = EX. EDGE OF PAVEMENT
- C/L = EX. CENTER LINE
- R/W = EX. RIGHT OF WAY
- OHF = PROP. OVERHEAD FIBER
- B = PROP. BURIED FIBER
- P/L = EX. PROPERTY LINE
- PROPOSED ANCHOR & GUY
- FOREIGN/EXISTING ANCHOR & GUY
- AERIAL STORAGE LOOP
- BURIED STORAGE LOOP
- PROPOSED HANDHOLE
- EXISTING HANDHOLE
- STORM DRAIN
- FIRE HYDRANT

HORIZ. 1" = 40'
VERT. 1" = 10'

MOT PLAN: 1550.1 + 1529

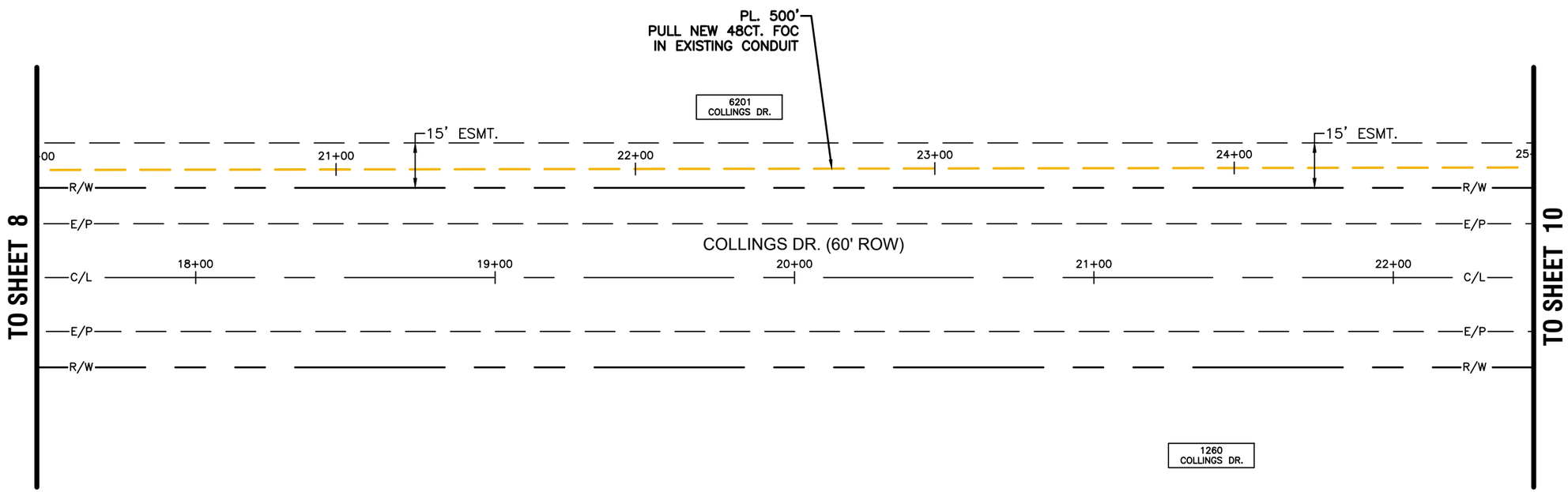

PAGE RATE CARD			
UNIT CODE & DESCRIPTION	UNITS	ESTIMATED QUANTITY	ACTUAL QUANTITY
HANDHOLE 24"X36"X40"	EACH	0	
1-2" HDPE	FT	0	
48CT FOC	FT	500	

CONTRACTOR: SEE PERMIT MOT NOTE #8 a & b – EASEMENTS

LEGEND:

- G — GAS LINE
- -SAN- — SANITARY SEWER
- STM — STORM SEWER
- W — WATER LINE
- S/L — SLUDGE LINE
- E — ELECTRIC
- TR — TRAFFIC
- TRAFFIC SIGNAL POLE
- TRAFFIC PULL BOX
- PEDESTRIAN PEDESTAL

ASBUILT CHANGES / REVISIONS

DATE	DESCRIPTIONS
–	–
–	–
–	–
–	–
–	–

OHIO Utilities Protection SERVICE
Call Before You Dig
1-800-362-2764
OR 8-1-1
CALL TWO WORKING DAYS BEFORE YOU DIG
(NON MEMBERS MUST BE CALLED DIRECTLY)

6040 COLLINGS DR.

DESIGNER: K. KHAY

SCALE BAR = 1:40
0 20 40 60 80

everstream®
FASTER FIBER. BETTER BUSINESS.®

INFORMATION IN THIS DOCUMENT IS PROPRIETARY AND CONFIDENTIAL AND SHALL NOT BE USED, COPIED, REPRODUCED, OR DISCLOSED WITHOUT PRIOR WRITTEN CONSENT OF EVERSTREAM

PLANS PREPARED BY:
NEESAI CAD DESIGNS

Drawing Information: Facility locations are general in nature and are only intended for approximate location reference. Neesai CAD Deisgns will not be held liable for the accuracy and will not assume responsibility for any damages resulting from these drawings.

LEGEND

E/P = EX. EDGE OF PAVEMENT		OHF = PROP. OVERHEAD FIBER	
C/L = EX. CENTER LINE		B = PROP. BURIED FIBER	
R/W = EX. RIGHT OF WAY		P/L = EX. PROPERTY LINE	

PROPOSED ANCHOR & GUY	PROPOSED HANDHOLE
FOREIGN/EXISTING ANCHOR & GUY	EXISTING HANDHOLE
AERIAL STORAGE LOOP	STORM DRAIN
BURIED STORAGE LOOP	FIRE HYDRANT

HORIZ. 1" = 40'
VERT. 1" = 10'

SHEET: 9 OF 22

MOT PLAN: 1550.1 + 1529

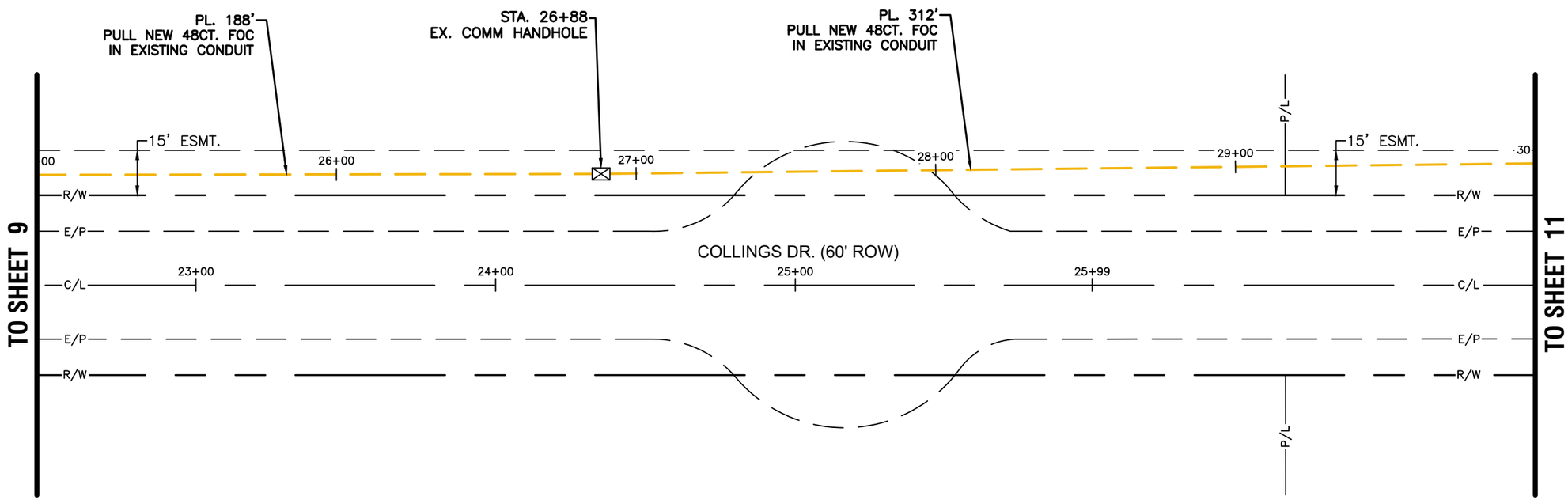

PAGE RATE CARD			
UNIT CODE & DESCRIPTION	UNITS	ESTIMATED QUANTITY	ACTUAL QUANTITY
HANDHOLE 24"X36"X40"	EACH	0	
1-2" HDPE	FT	0	
48CT FOC	FT	500	

CONTRACTOR: SEE PERMIT MOT NOTE #8 a & b – EASEMENTS

LEGEND:

- G — GAS LINE
- -SAN- — SANITARY SEWER
- STM — STORM SEWER
- W — WATER LINE
- S/L — SLUDGE LINE
- E — ELECTRIC
- TR — TRAFFIC
- TRAFFIC SIGNAL POLE
- TRAFFIC PULL BOX
- PEDESTRIAN PEDESTAL

ASBUILT CHANGES / REVISIONS

DATE	DESCRIPTIONS
–	–
–	–
–	–
–	–
–	–

OHIO Utilities Protection SERVICE
Call Before You Dig
1-800-362-2764
OR 8-1-1
CALL TWO WORKING DAYS BEFORE YOU DIG
(NON MEMBERS MUST BE CALLED DIRECTLY)

6040 COLLINGS DR.

DESIGNER: K. KHAY

SCALE BAR = 1:40
0 20 40 60 80

everstream®
FASTER FIBER. BETTER BUSINESS.®

INFORMATION IN THIS DOCUMENT IS PROPRIETARY AND CONFIDENTIAL AND SHALL NOT BE USED, COPIED, REPRODUCED, OR DISCLOSED WITHOUT PRIOR WRITTEN CONSENT OF EVERSTREAM

PLANS PREPARED BY:
NEESAI CAD DESIGNS

Drawing Information: Facility locations are general in nature and are only intended for approximate location reference. Neesai CAD Deisgns will not be held liable for the accuracy and will not assume responsibility for any damages resulting from these drawings.

LEGEND

- E/P = EX. EDGE OF PAVEMENT
- C/L = EX. CENTER LINE
- R/W = EX. RIGHT OF WAY
- OHF = PROP. OVERHEAD FIBER
- B = PROP. BURIED FIBER
- P/L = EX. PROPERTY LINE
- PROPOSED ANCHOR & GUY
- FOREIGN/EXISTING ANCHOR & GUY
- AERIAL STORAGE LOOP
- BURIED STORAGE LOOP
- PROPOSED HANDHOLE
- EXISTING HANDHOLE
- STORM DRAIN
- FIRE HYDRANT

HORIZ. 1" = 40'
VERT. 1" = 10'

SHEET: 10 OF 22

MOT PLAN: 1550.1 + 1529

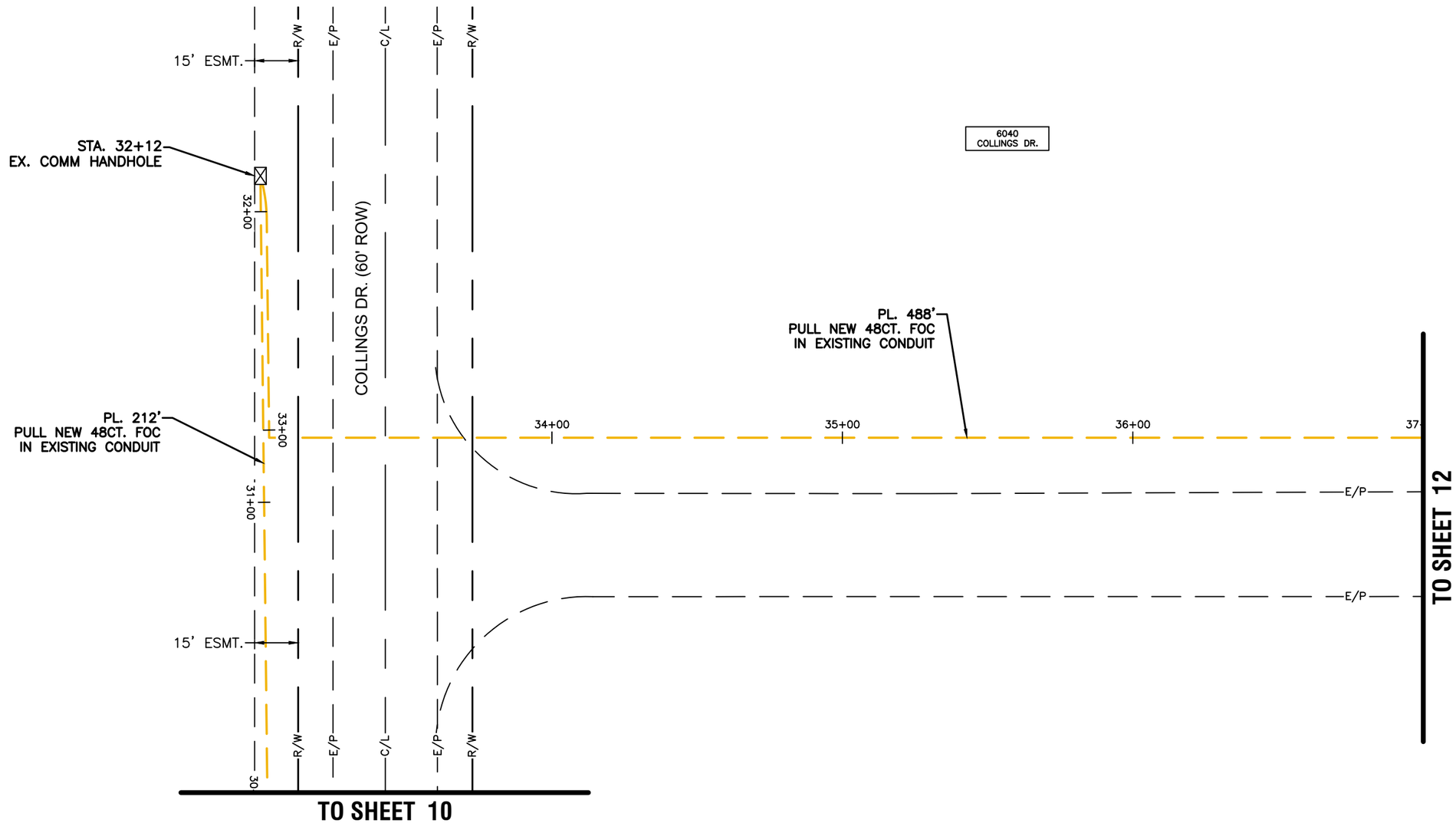

PAGE RATE CARD			
UNIT CODE & DESCRIPTION	UNITS	ESTIMATED QUANTITY	ACTUAL QUANTITY
HANDHOLE 24"X36"X40"	EACH	0	
1-2" HDPE	FT	0	
48CT FOC	FT	600	

N

CONTRACTOR: SEE
PERMIT MOT NOTE #8
a & b – EASEMENTS

LEGEND:

- G — GAS LINE
- -SAN- — SANITARY SEWER
- STM — STORM SEWER
- W — WATER LINE
- S/L — SLUDGE LINE
- E — ELECTRIC
- TR — TRAFFIC
- TRAFFIC SIGNAL POLE
- TRAFFIC PULL BOX
- PEDESTRIAN PEDESTAL

ASBUILT CHANGES / REVISIONS

DATE	DESCRIPTIONS
–	–
–	–
–	–
–	–
–	–
–	–

OHIO Utilities Protection SERVICE
Call Before You Dig
1-800-362-2764
OR 8-1-1
CALL TWO WORKING DAYS BEFORE YOU DIG
(NON MEMBERS MUST BE CALLED DIRECTLY)

6040 COLLINGS DR.

DESIGNER: K. KHAY

SCALE BAR = 1:40
0 20 40 60 80

everstream®
FASTER FIBER. BETTER BUSINESS.®

INFORMATION IN THIS DOCUMENT IS PROPRIETARY AND CONFIDENTIAL AND SHALL NOT BE USED, COPIED, REPRODUCED, OR DISCLOSED WITHOUT PRIOR WRITTEN CONSENT OF EVERSTREAM

PLANS PREPARED BY:
NEESAI CAD DESIGNS

Drawing Information: Facility locations are general in nature and are only intended for approximate location reference. Neesai CAD Deisgns will not be held liable for the accuracy and will not assume responsibility for any damages resulting from these drawings.

LEGEND

- E/P = EX. EDGE OF PAVEMENT
- C/L = EX. CENTER LINE
- R/W = EX. RIGHT OF WAY
- OHF = PROP. OVERHEAD FIBER
- B = PROP. BURIED FIBER
- P/L = EX. PROPERTY LINE
- PROPOSED ANCHOR & GUY
- FOREIGN/EXISTING ANCHOR & GUY
- AERIAL STORAGE LOOP
- BURIED STORAGE LOOP
- PROPOSED HANDHOLE
- EXISTING HANDHOLE
- STORM DRAIN
- FIRE HYDRANT

HORIZ. 1" = 40'
VERT. 1" = 10'

SHEET: 11 OF 22

MOT PLAN: 1550.1 + 1529

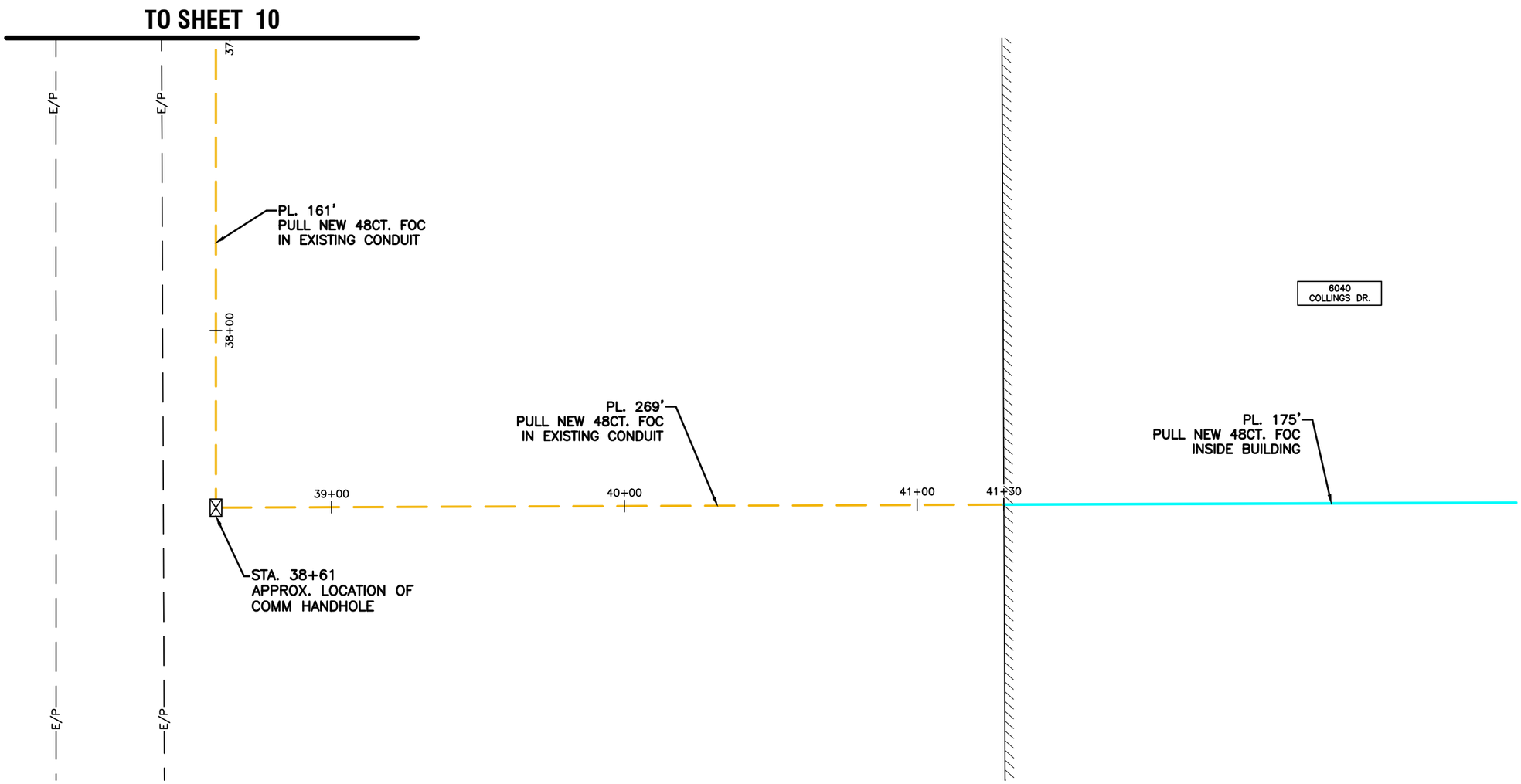

PAGE RATE CARD			
UNIT CODE & DESCRIPTION	UNITS	ESTIMATED QUANTITY	ACTUAL QUANTITY
HANDHOLE 24"X36"X40"	EACH	0	
1-2" HDPE	FT	0	
48CT FOC	FT	605	

CONTRACTOR: SEE
PERMIT MOT NOTE #8
a & b – EASEMENTS

LEGEND:

- G — GAS LINE
- -SAN- — SANITARY SEWER
- STM — STORM SEWER
- W — WATER LINE
- S/L — SLUDGE LINE
- E — ELECTRIC
- TR — TRAFFIC
- TRAFFIC SIGNAL POLE
- TRAFFIC PULL BOX
- PEDESTRIAN PEDESTAL

ASBUILT CHANGES / REVISIONS

DATE	DESCRIPTIONS
–	–
–	–
–	–
–	–
–	–
–	–

OHIO Utilities Protection SERVICE
Call Before You Dig
1-800-362-2764
OR 8-1-1
CALL TWO WORKING DAYS BEFORE YOU DIG
(NON MEMBERS MUST BE CALLED DIRECTLY)

6040 COLLINGS DR.

DESIGNER: K. KHAY

SCALE BAR = 1:40
0 20 40 60 80

everstream®
FASTER FIBER. BETTER BUSINESS.®

INFORMATION IN THIS DOCUMENT IS PROPRIETARY AND CONFIDENTIAL AND SHALL NOT BE USED, COPIED, REPRODUCED, OR DISCLOSED WITHOUT PRIOR WRITTEN CONSENT OF EVERSTREAM

PLANS PREPARED BY:
NEESAI CAD DESIGNS

Drawing Information: Facility locations are general in nature and are only intended for approximate location reference. Neesai CAD Deisgns will not be held liable for the accuracy and will not assume responsibility for any damages resulting from these drawings.

LEGEND

- E/P = EX. EDGE OF PAVEMENT
- C/L = EX. CENTER LINE
- R/W = EX. RIGHT OF WAY
- OHF = PROP. OVERHEAD FIBER
- B = PROP. BURIED FIBER
- P/L = EX. PROPERTY LINE
- PROPOSED ANCHOR & GUY
- FOREIGN/EXISTING ANCHOR & GUY
- AERIAL STORAGE LOOP
- BURIED STORAGE LOOP
- PROPOSED HANDHOLE
- EXISTING HANDHOLE
- STORM DRAIN
- FIRE HYDRANT

HORIZ. 1" = 40'
VERT. 1" = 10'

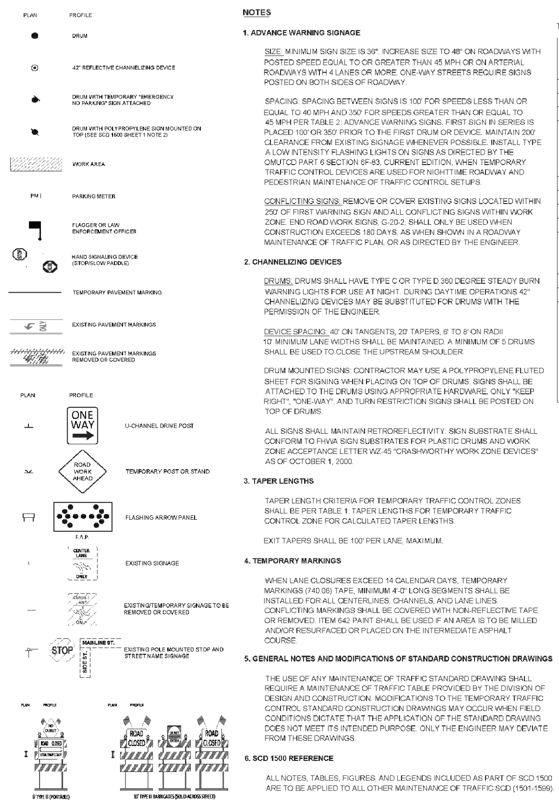

NOTES

1. ADVANCE WARNING SIGNAGE

SIZE: MINIMUM SIGN SIZE IS 36". INCREASE SIZE TO 48" ON ROADWAYS WITH POSTED SPEED EQUAL TO OR GREATER THAN 45 MPH OR ON ARTERIAL ROADWAYS WITH 4 LANES OR MORE. ONE-WAY STREETS REQUIRE SIGNS POSTED ON BOTH SIDES OF ROADWAY.

SPACING: SPACING BETWEEN SIGNS IS 100' FOR SPEEDS LESS THAN OR EQUAL TO 40 MPH AND 350' FOR SPEEDS GREATER THAN OR EQUAL TO 45 MPH PER TABLE 2: ADVANCE WARNING SIGNS. FIRST SIGN IN SERIES IS PLACED 100' OR 350' PRIOR TO THE FIRST DRUM OR DEVICE. MAINTAIN 200' CLEARANCE FROM EXISTING SIGNAGE WHENEVER POSSIBLE. INSTALL TYPE A LOW INTENSITY FLASHING LIGHTS ON SIGNS AS DIRECTED BY THE OMUTCD PART 6 SECTION 6F-83, CURRENT EDITION. WHEN TEMPORARY TRAFFIC CONTROL DEVICES ARE USED FOR NIGHTTIME ROADWAY AND PEDESTRIAN MAINTENANCE OF TRAFFIC CONTROL SETUPS.

CONFLICTING SIGNS: REMOVE OR COVER EXISTING SIGNS LOCATED WITHIN 250' OF FIRST WARNING SIGN AND ALL CONFLICTING SIGNS WITHIN WORK ZONE. END ROAD WORK SIGNS, G-20-2, SHALL ONLY BE USED WHEN CONSTRUCTION EXCEEDS 180 DAYS, AS WHEN SHOWN IN A ROADWAY MAINTENANCE OF TRAFFIC PLAN, OR AS DIRECTED BY THE ENGINEER.

2. CHANNELIZING DEVICES

DRUMS: DRUMS SHALL HAVE TYPE C OR TYPE D 360 DEGREE STEADY BURN WARNING LIGHTS FOR USE AT NIGHT. DURING DAYTIME OPERATIONS 42" CHANNELIZING DEVICES MAY BE SUBSTITUTED FOR DRUMS WITH THE PERMISSION OF THE ENGINEER.

DEVICE SPACING: 40' ON TANGENTS, 20' TAPERS, 6' TO 8' ON RADII 10' MINIMUM LANE WIDTHS SHALL BE MAINTAINED. A MINIMUM OF 5 DRUMS SHALL BE USED TO CLOSE THE UPSTREAM SHOULDER.

DRUM MOUNTED SIGNS: CONTRACTOR MAY USE A POLYPROPYLENE FLUTED SHEET FOR SIGNING WHEN PLACING ON TOP OF DRUMS. SIGNS SHALL BE ATTACHED TO THE DRUMS USING APPROPRIATE HARDWARE. ONLY "KEEP RIGHT", "ONE-WAY", AND TURN RESTRICTION SIGNS SHALL BE POSTED ON TOP OF DRUMS.

ALL SIGNS SHALL MAINTAIN RETROREFLECTIVITY. SIGN SUBSTRATE SHALL CONFORM TO FHWA SIGN SUBSTRATES FOR PLASTIC DRUMS AND WORK ZONE ACCEPTANCE LETTER WZ-45 "CRASHWORTHY WORK ZONE DEVICES" AS OF OCTOBER 1, 2000.

3. TAPER LENGTHS

TAPER LENGTH CRITERIA FOR TEMPORARY TRAFFIC CONTROL ZONES SHALL BE PER TABLE 1: TAPER LENGTHS FOR TEMPORARY TRAFFIC CONTROL ZONE FOR CALCULATED TAPER LENGTHS.

EXIT TAPERS SHALL BE 100' PER LANE, MAXIMUM.

4. TEMPORARY MARKINGS

WHEN LANE CLOSURES EXCEED 14 CALENDAR DAYS, TEMPORARY MARKINGS (740.06) TAPE, MINIMUM 4'-0" LONG SEGMENTS SHALL BE INSTALLED FOR ALL CENTERLINES, CHANNELS, AND LANE LINES. CONFLICTING MARKINGS SHALL BE COVERED WITH NON-REFLECTIVE TAPE OR REMOVED. ITEM 642 PAINT SHALL BE USED IF AN AREA IS TO BE MILLED AND/OR RESURFACED OR PLACED ON THE INTERMEDIATE ASPHALT COURSE.

5. GENERAL NOTES AND MODIFICATIONS OF STANDARD CONSTRUCTION DRAWINGS

THE USE OF ANY MAINTENANCE OF TRAFFIC STANDARD DRAWING SHALL REQUIRE A MAINTENANCE OF TRAFFIC TABLE PROVIDED BY THE DIVISION OF DESIGN AND CONSTRUCTION. MODIFICATIONS TO THE TEMPORARY TRAFFIC CONTROL STANDARD CONSTRUCTION DRAWINGS MAY OCCUR WHEN FIELD CONDITIONS DICTATE THAT THE APPLICATION OF THE STANDARD DRAWING DOES NOT MEET ITS INTENDED PURPOSE. ONLY THE ENGINEER MAY DEVIATE FROM THESE DRAWINGS.

6. SCD 1500 REFERENCE

ALL NOTES, TABLES, FIGURES, AND LEGENDS INCLUDED AS PART OF SCD 1500 ARE TO BE APPLIED TO ALL OTHER MAINTENANCE OF TRAFFIC SCD (1501-1599).

TABLE 1: TAPER LENGTHS FOR TEMPORARY TRAFFIC CONTROL ZONES †

WIDTH OF SHOULDER	25 MPH	30 MPH	35 MPH	40 MPH	45 MPH	50 MPH	55 MPH	60 MPH
D: TAPER RATE (SHOULDER) CLOSURE OMUTCD 0.33L = WS²/60					0.33L = WS			
6'	*	*	*	53'	89'	99'	109'	119'
7'	*	*	47'	62'	104'	116'	127'	139'
8'	*	*	54'	70'	119'	132'	145'	158'
9'	*	45'	61'	79'	134'	149'	163'	178'
10'	*	50'	67'	88'	149'	165'	182'	198'
11'	*	54'	74'	97'	163'	182'	200'	218'
12'	*	59'	81'	106'	178'	198'	218'	238'
E: TAPER RATE (MERGE) CLOSURE OMUTCD L = WS²/60					L = WS			
WIDTH OF LANE CLOSED	25 MPH	30 MPH	35 MPH	40 MPH	45 MPH	50 MPH	55 MPH	60 MPH
10'	104'	150'	204'	267'	450'	500'	550'	600'
11'	115'	165'	225'	293'	495'	550'	605'	660'
12'	125'	180'	245'	320'	540'	600'	660'	720'
13'	135'	195'	265'	347'	585'	650'	715'	780'
F: TAPER RATE (SHIFT) CLOSURE OMUTCD 0.5L = WS²/60					L = WS			
WIDTH OF LANE SHIFT	25 MPH	30 MPH	35 MPH	40 MPH	45 MPH	50 MPH	55 MPH	60 MPH
10'	52'	75'	102'	133'	450'	500'	550'	600'
11'	57'	83'	112'	147'	495'	550'	605'	660'
12'	62'	90'	123'	160'	540'	600'	660'	720'
13'	68'	98'	133'	173'	585'	650'	715'	780'

NOTES:
1. WHEN PAVED SHOULDERS ARE CLOSED IN CONJUNCTION WITH A RIGHT LANE CLOSURE OR SHIFT ADD SHOULDER WIDTH TO LANE WIDTH TO CALCULATE TAPER LENGTH.
2. FOR PAVED SHOULDERS UNDER 6' USE 40 TAPER LENGTH.
3. L = TAPER LENGTH, W = WIDTH OF OFFSET, S = POSTED SPEED LIMIT OR 85TH PERCENTILE SPEED
* = 40'

† TABLE DERIVED FROM OMUTCD, CURRENT EDITION, PART 6, TABLES 6C-3 AND 6C-4

TABLE 2: ADVANCE WARNING SIGNS ‡

ROAD TYPE	DISTANCE BETWEEN SIGNS ** A	B	C
URBAN (LOW SPEED*) ≤ 40 MPH	100 FT	100 FT	100 FT
URBAN (HIGH SPEED*) ≥ 45 MPH	350 FT	350 FT	350 FT
RURAL	500 FT	500 FT	500 FT
EXPRESSWAY/FREEWAY	1,000 FT	1,500 FT	2,640 FT

‡ FROM OMUTCD, CURRENT EDITION, PART 6 TABLE 6C-1

* SPEED CATEGORY DETERMINED BY THE CITY OF COLUMBUS TO BE LOW SPEED (POSTED SPEED LIMIT LESS THAN OR EQUAL TO 40MPH) OR HIGH SPEED (POSTED SPEED LIMIT GREATER THAN OR EQUAL TO 45MPH)

**THE COLUMN HEADINGS 'A', 'B', 'C', 'D', 'E', AND 'F' ARE THE DIMENSIONS SHOWN IN STANDARD DRAWINGS AND ARE DEFINED AS:

'A' = THE DISTANCE FROM THE TRANSITION OR POINT OF RESTRICTION TO THE FIRST SIGN (CLOSEST TO THE TTC ZONE).
'B' = THE 'B' DIMENSION IS THE DISTANCE BETWEEN THE FIRST AND SECOND SIGN.
'C' = DIMENSION IS THE DISTANCE BETWEEN THE SECOND AND THIRD SIGN (FURTHEST UPSTREAM FROM THE TTC ZONE).
'D' = SHOULDER TAPER LENGTH.
'E' = MERGE TAPER LENGTH.
'F' = SHIFT TAPER LENGTH.

TABLE 3: TANGENT LENGTHS FOR TEMPORARY TRAFFIC CONTROL ZONES ʎ

ROAD TYPE	ZONE SETUP	
LOW SPEED < 40 MPH	BETWEEN MERGE AND SHIFT TAPERS	(½)L = WS²
HIGH SPEED > 45 MPH	BETWEEN MERGE AND SHIFT TAPERS	L = WS
LOW SPEED < 40 MPH	BETWEEN 2 MERGE TAPERS	L = WS²
HIGH SPEED > 45 MPH	BETWEEN 2 MERGE TAPERS	2L = WS

ʎ TANGENT SECTION LENGTHS MAY BE CHANGED BY ENGINEER.

TYPICAL ADV. WARNING SIGNS FOR BIKE LANE CLOSURES

Recommend Advanced Warning Signs For Bicycle Lane Closure

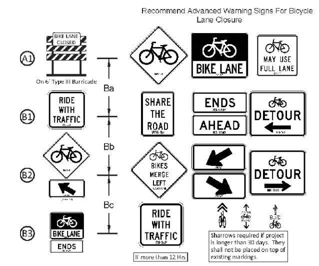

TABLE 4: BIKES LANE CLOSURE SIGN SPACING

ROAD TYPE	DISTANCE BETWEEN SIGNS ** B a	B b	B c
URBAN (LOW SPEED*) ≤ 40 MPH	50'min-100' max	50'min-100' max	50'min-100' max
URBAN (HIGH SPEED*) ≥ 45 MPH	100'min 200' max	100'min 200' max	100'min 200' max

TYPICAL SIDEWALK CLOSURE / PEDESTRIAN DETOUR SIGNS

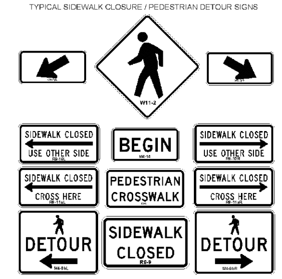

PERMIT MOT SHT 1500

MAINTENANCE OF TRAFFIC GENERAL NOTES	
CITY OF COLUMBUS, OHIO DEPARTMENT OF PUBLIC SERVICE DIVISION OF DESIGN AND CONSTRUCTION	STD DWG 1500
Preliminary	2022
rcpennington	SHEETS 1, 2 & 3

Sidewalk Closure and Pedestrian Diversion Applications

Standards: 1. When crosswalks or other pedestrian facilities are closed or relocated temporary facilities shall be detectable and shall include accessibility features consistent with the features present in the existing pedestrian facility.
Guidance: 2. Where high speeds are anticipated, a temporary traffic barrier and, if necessary, a crash cushion should be used to separate the temporary sidewalks from vehicular traffic.
3. Audible information devices should be considered where mid-block closings and changed crosswalk areas cause inadequate communication to be provided to pedestrians who have visual disabilities.
Options: a. Street lighting may be considered.
b. Only the TTC devices related to pedestrians are shown. Other devices, such as lane closure signing or ROAD WORK AHEAD signs may be used to control vehicular traffic.
c. For night time closures, Type A Flashing warning light may be used on barricades that support signs and close sidewalks.
d. Type C Steady-Burn or Type D 360-Degree Steady-Burn warning lights may be used on channelizing devices separating the temporary sidewalks from vehicular traffic flow.
e. Signs, such as KEEP RIGHT (LEFT), may be placed along a temporary sidewalk to guide or direct pedestrians.

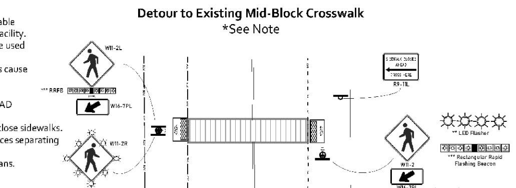

* City of Columbus, Permit MOT Review does not recommend the use of Temporary Pedestrian Crosswalks (TPC) for short term work zones. Should a TPC be required the double yellow center line and lane lines must be concealed or removed between the crosswalk lines.

Reference:
FWHA MUTCD Tables 6H-2 and 6H-3 for the meaning of the symbols and / or letter codes used in these figures.

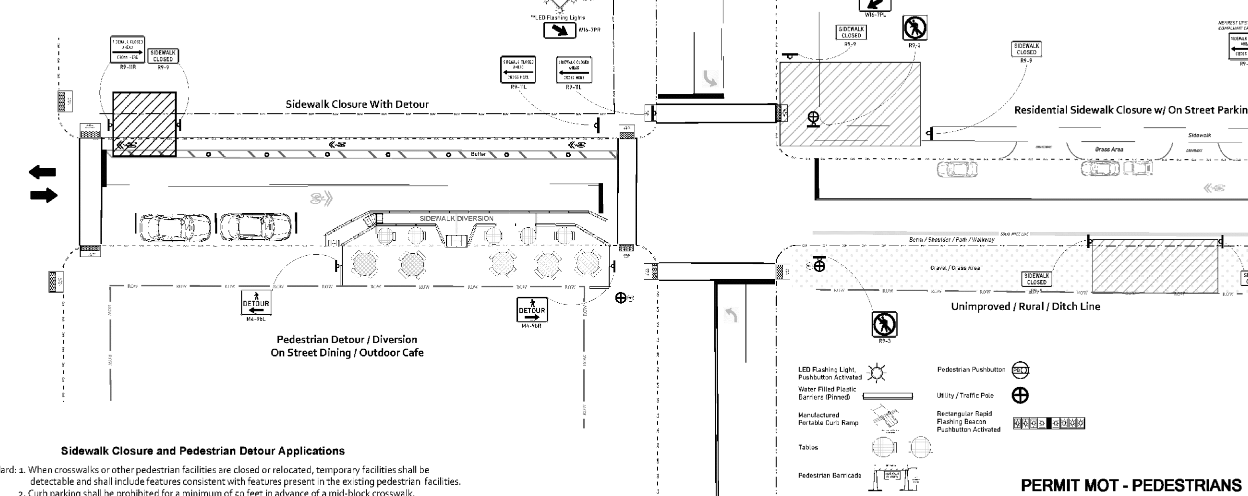

Sidewalk Closure and Pedestrian Detour Applications

Standard: 1. When crosswalks or other pedestrian facilities are closed or relocated, temporary facilities shall be detectable and shall include features consistent with features present in the existing pedestrian facilities.
2. Curb parking shall be prohibited for a minimum of 50 feet in advance of a mid-block crosswalk.

Guidance: 1. Audible information devices should be considered where mid-block closings and changed crosswalk areas cause inadequate communication to be provided to pedestrians who have visual disabilities.
2. Pedestrian traffic signal displays controlling closed crosswalks should be covered or deactivated.

Options: a. Street lighting may be considered.
b. Only TTC devices related to pedestrians are shown. Other devices, such as lane closure signing or ROAD WORK AHEAD signs may be used to control vehicular traffic.
c. Type C Steady-Burn or Type D 360-degree Steady-Burn warning lights may be used in channelizing devices separating the work area from vehicular traffic.
d. In order to maintain systematic use of florescent yellow-green background for pedestrian, bicycle and school warning signs in a jurisdiction, the fluorescent yellow-green background for pedestrian, bicycle and school warning signs may be used in TTC zones.

City of Columbus Permit MOT Policy
"Sidewalks" are defined as ANY area within the Right Of Way used by pedestrians.
SHALL NOT - Close Opposing Sidewalks or Crosswalks Simultaneously.
SHALL - Place Sidewalk Closed (R9-9) signs on each end of the Work Zone
SHALL - Place Pedestrian Detour signs at nearest ADA Compliant crosswalk beyond the Work Zone.

Sidewalk Closure, Detour & Diversion (TA-28, TA-29) are based on FHWA'S MUTCD 2023 Edition Revised for Columbus Permit MOT Plans

PERMIT MOT - PEDESTRIANS

SIDEWALK CLOSURE DETOUR & DIVERSION	
CITY OF COLUMBUS, OHIO DEPARTMENT OF PUBLIC SERVICE DIVISION OF DESIGN AND CONSTRUCTION	STD DWG 1529
Preliminary	03/06/2024
rcpennington	SHEET 1 / 1

PERMIT MOT NOTES

https://www.columbus.gov/publicservice/Design-and-Construction/Document-Library/

1. PERMIT MOT / TTC - SUBMITTAL

a.STANDARD DRAWINGS - ONLY COLUMBUS 1500-1550 WILL BE ACCEPTED FOR USE MOT / TTC ON PERMITS.

b.SITE SPECIFIC
REQUIRED - WHEN WORK ZONE IMPACTS A SIGNALIZED INTERSECTION.
REQUIRED - WHEN WORK AREA IN THE CENTRAL BUSINESS DISTRICT.
REQUIRED - WHEN REQUESTED BY MOT PERMIT REVIEW.
REQUIRED - LAW ENFORCEMENT OFFICER (LEO) AT SIGNALIZED INTERSECTIONS.

2. MASS TRANSIT AND RIDE SHARE

a.COTA BUS STOPS
SHALL CONTACT PRIOR TO START - PAUL EVANS - COTA SERVICE PROGRAM MANAGER (614) 308-4373 evanspm1@cota.com.
THIRTY DAYS - ANY CLOSURE WHICH CREATES DELAY OR DETOUR ON ASSIGNED ROUTES REQUIRES A TEMPORARY RELOCATION.
24 HOURS - PRIOR TO START OF CONSTRUCTION WITHIN 300' OF COTA ASSETS IN THE RIGHT OF WAY.
IMMEDIATELY - IN EVENT OF UNPLANNED WORK AFFECTING COTA BUS STOPS.

b.COTA ASSETS
SHALL CONTACT PRIOR TO START - PAUL EVANS - COTA SERVICE PROGRAM MANAGER (614) 308-4373 evanspm1@cota.com.
SHALL KEEP OPEN ALL STOPS & STATIONS IN WORK ZONE IF RELOCATION IS NOT REQUIRED BY COTA PROGRAM SERVICES MANAGER.

c.COGO - RIDE SHARE BIKE CHARGING STATIONS
SHALL CONTACT PRIOR TO START - CHET RIDENOUR - COGO BIKE SHARE OPERATIONS MANAGER (614) 506-8100 cridenour@lyft.com.
THIRTY DAYS - IF CLOSURE IMPACTS COGO BIKE STATION, LIMITS PUBLIC ACCESS DURING CONSTRUCTION.
24 HOURS - PRIOR TO START OF CONSTRUCTION WITHIN 300' OF COGO ASSETS.
IMMEDIATELY - IN EVENT OF UNPLANNED WORK AFFECTING COGO/LIFT ASSETS

3. BIKES AND PEDESTRIANS

a.BIKE LANE CLOSURE
WHEN A BIKE LANE PAVEMENT MARKING EXIST AND MUST BE INCLUDED IN THE MOT / TTC PLAN.
REFERENCE - MOT SHEET 1500 ADVANCE WARNING SIGNS WHEN CLOSING THE BIKE LANE AND MERGING BIKES.
REFERENCE - MOT SHEET 1500 TABLE 4 ADVANCE WARNING SIGN SPACING.
REQUIRED - ONE (1) SHARE THE ROAD SIGN MID-TAPER WHEN NO BIKE LANE BUT SHARROWS ONLY EXIST.

b.SIDEWALKS / CROSSWALKS
THE CONTRACTOR:
SHALL NOT CLOSE OPPOSING SIDEWALKS OR CROSSWALKS SIMULTANEOUSLY.
SHALL KEEP SIDEWALKS & CROSSWALKS BEYOND THE ACTIVE WORK AREA OPEN AT ALL TIMES.
SHALL PLACE R9-9 SIGNS EACH END OF THE ACTIVE WORK AREA.
SHALL PLACE R9-11 SIGNS AT THE NEAREST ADA CROSSWALKS BEYOND THE ACTIVE WORK AREA.

Note: "Sidewalks" defined ANY area within the right of way used by pedestrians.

4. PARKING

a.DRIVEWAYS
THE CONTRACTOR:
SHALL PROVIDE 72 HOURS ADVANCE NOTICE WHEN CLOSING DRIVEWAYS.
SHALL RESTORE ACCESS FOLLOWING END OF WORK THAT DAY AND MAINTAIN AREA IN COMPLIANCE WITH ADA REQUIREMENTS.
SHALL MONITOR OBSTRUCTED DRIVEWAYS AND RESPONSIBLE TO MAINTAIN ACCESS AS NEEDED.

b.ON STREET
THE CONTRACTOR:
SHALL CONTACT PARKING ENFORCEMENT (614) 645-4072 48 HOURS IN ADVANCE WHEN CLOSING METERED/APP PAY PARKING.
SHALL LIMIT PARKING RESTRICTIONS TO "AS NEEDED" TO SAFELY COMPLETE THE WORK.
SHALL PROVIDE 72 HOURS ADVANCE NOTICE TO RESIDENTS WHEN TEMPORARILY CLOSING ON STREET PARKING AREAS.
SHALL RESTORE ACCESS FOLLOWING END OF EACH WORK DAY.
SHALL MAINTAIN LANE WIDTH SUFFICIENT FOR VEHICLES TO SAFELY PASS THROUGH WORK AREA.
SHALL MONITOR AND ASSIST PERMITTED HANDICAP PARKING SPACES AS DEFINED BY THE ADA.

5. ADVANCE WARNING SIGNS

a.SIGNS, SIZES, SPACING, DISTANCE
THE CONTRACTOR:
SHALL PLACE SIGNS ON INTERSECTING STREETS WHEN NO ADVANCED WARNING SIGN IS SEEN PRIOR TO ENTERING THE WORK AREA.

b.SIZES < 40 MPH "LOW SPEED" AND 36" x 36 SHOULD BE USED.

c.SIZES > 45 MPH "HIGH SPEED" AND 48" x 48" SHOULD BE USED.

d.SPACING PER MOT SHEET 1500 TABLE 2.

e.DISTANCE VARIES WHEN TURN ONLY LANES EXIST. THE SPACE FROM STOP BAR TO TURN LANE PAVEMENT MARKINGS ORIGIN, CONTINUE PER TABLE 2.

6. TMC - SIGNAL TIMING, CAMERA MONITORING AND RECORDING

a.CITY OF COLUMBUS TMC - TRAFFIC MANAGEMENT CENTER (614) 645-7249

b.SIGNALS - TIMING CHANGES MAY BE REQUESTED BY SPECIAL DUTY LAW ENFORCEMENT OFFICER (LEO).

c.CAMERAS - MONITORING AND RECORDING MUST BE ARRANGED 72 HOURS IN ADVANCE.

7. SHOULDER CLOSURES

THE CONTRACTOR:
SHALL NOT OCCUPY, BLOCK OR IMPEDE A LANE OF TRAVEL (LOT) WHILE USING A SHOULDER CLOSURE PER 6H-3 MODIFIED
SHALL PERFORM WORK BEYOND THE EDGE OF PAVEMENT (EOP), SOLID WHITE LINE (SWL), LANE OF TRAVEL (LOT), OR BACK OF CURB (BOC).
SHALL MAINTAIN A BUFFER, SAFE DISTANCE FROM THE SWL FOR TRAFFIC CONTROL DEVICE PLACEMENT ON EOP, SWL OR LOT.
SHALL PLACE R9-9 & R9-11 SIGNS FOR SIDEWALK CLOSURE & PEDESTRIAN DETOURS PER TYPICAL 6H29 FOR PEDESTRIAN SAFETY.
SHALL SECURE PERMISSION IN ADVANCE TO PARK, STORE, STAGE & SITE ACCESS.

NOTES:
a. DEFINITIONS: Edge of Pavement (EOP), Back of Curb (BOC), Face of Curb (FOC), Solid White Line (SWL), Lane of Travel (LOT)

b. Work Zone - Equipment, Staging & Storage is prohibited within 2' of the EOP, SWL, and LOT.
Traffic Conditions - Must remain normal when deploying shoulder closures.
Separation - A 2' Buffer between the work zone and lane of travel must be maintained.
Compliance - If not in compliance with the above MOT Approval is REVOKED. Cease and Contact the MOT Supervisor immediately (614) 645-0355.

8. EASEMENTS

a.EASEMENT ACCESS WITHIN PUBLIC RIGHT OF WAY
THE CONTRACTOR:
SHALL DEPLOY TRAFFIC CONTROL WHEN STAGING, STORAGE AND ACCESSING EASEMENTS.
SHALL DEPLOY PEDESTRIAN SAFETY MEASURES.

b.NOTES - Typical 1550.1 Traffic Control Plan when Accessing Easements Follow the Guidance Above

ASBUILT CHANGES / REVISIONS

DATE	DESCRIPTIONS
—	—
—	—
—	—
—	—
—	—

OHIO Utilities Protection SERVICE
Call Before You Dig
1-800-362-2764
OR 8-1-1
CALL TWO WORKING DAYS BEFORE YOU DIG
(NON MEMBERS MUST BE CALLED DIRECTLY)

6040 COLLINGS DR.

DESIGNER: K. KHAY

everstream®
FASTER FIBER. BETTER BUSINESS.®

INFORMATION IN THIS DOCUMENT IS PROPRIETARY AND CONFIDENTIAL AND SHALL NOT BE USED, COPIED, REPRODUCED, OR DISCLOSED WITHOUT PRIOR WRITTEN CONSENT OF EVERSTREAM

PLANS PREPARED BY:
NEESAI CAD DESIGNS

Drawing Information: Facility locations are general in nature and are only intended for approximate location reference. Neesai CAD Deisgns will not be held liable for the accuracy and will not assume responsibility for any damages resulting from these drawings.

LEGEND

—E/P—	= EX. EDGE OF PAVEMENT	—OHF—	= PROP. OVERHEAD FIBER
---C/L---	= EX. CENTER LINE	—B—	= PROP. BURIED FIBER
—R/W—	= EX. RIGHT OF WAY	—P/L—	= EX. PROPERTY LINE

PROPOSED ANCHOR & GUY	PROPOSED HANDHOLE
FOREIGN/EXISTING ANCHOR & GUY	EXISTING HANDHOLE
AERIAL STORAGE LOOP	STORM DRAIN
BURIED STORAGE LOOP	FIRE HYDRANT

SCALE: NONE

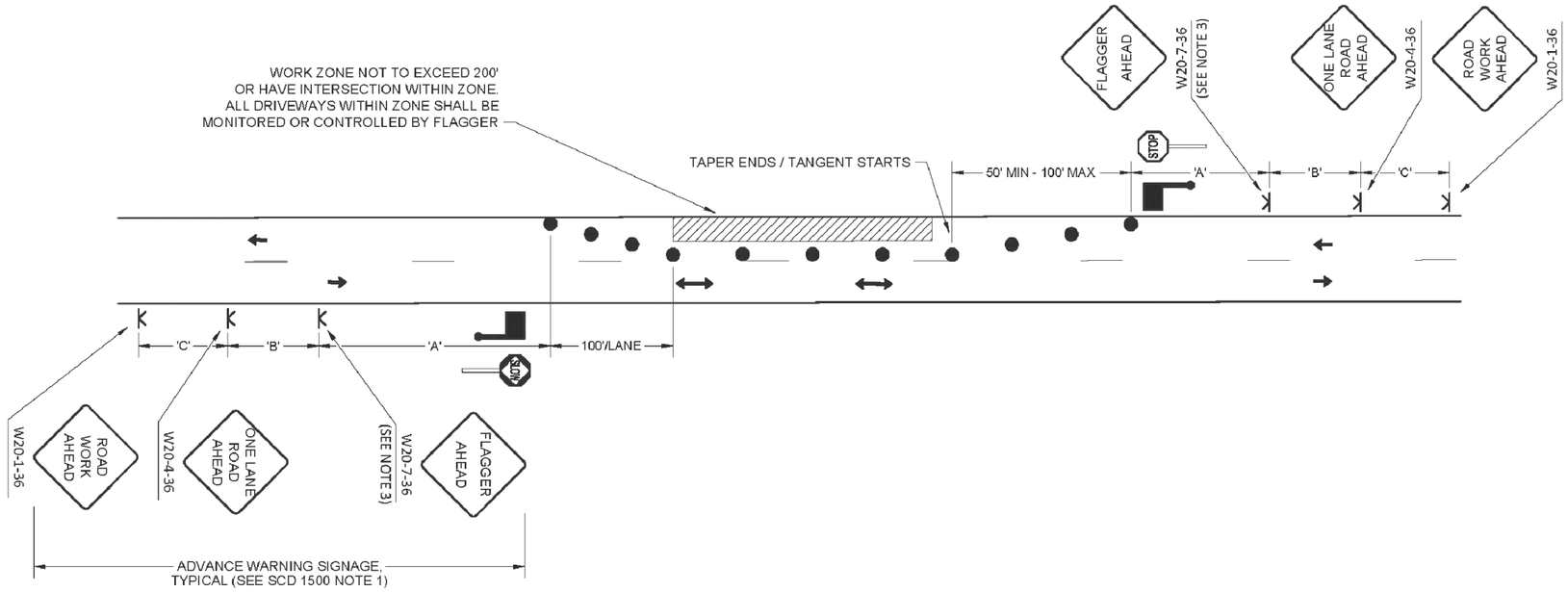

NOTES

1. FOR ADDITIONAL NOTES, TABLES, AND SYMBOL LEGEND SEE CITY OF COLUMBUS STANDARD CONSTRUCTION DRAWING 1500.
2. ON STRAIGHT ROADWAYS WITH SHORT WORK ZONES (50') IN LOW VOLUME SITUATIONS, WHERE THE FLAGGER IS VISIBLE TO ROAD USERS FROM BOTH DIRECTIONS, A SINGLE FLAGGER VISIBLY POSITIONED TO ROAD USERS APPROACHING FROM BOTH DIRECTIONS MAY BE USED.
3. NO SYMBOLS, TEXT ONLY.
4. FLAGGER USING STOP/SLOW PADDLE - SEE OMUTCD SECTION 6E.03.

TWO-WAY, ONE-LANE

FLAGGING OPERATIONS

CITY OF COLUMBUS, OHIO
DEPARTMENT OF PUBLIC SERVICE
DIVISION OF DESIGN AND CONSTRUCTION

CITY ENGINEER

STD DWG
1550
9/15/2015
SHT 1 OF 3

ASBUILT CHANGES / REVISIONS

DATE	DESCRIPTIONS
–	–
–	–
–	–
–	–
–	–
–	–

OHIO Utilities Protection SERVICE
Call Before You Dig
1-800-362-2764
OR 8-1-1
CALL TWO WORKING DAYS BEFORE YOU DIG
(NON MEMBERS MUST BE CALLED DIRECTLY)

6040 COLLINGS DR.

DESIGNER: K. KHAY

SCALE BAR = 1:80
0 40 80 120 160

everstream®
FASTER FIBER. BETTER BUSINESS.®

INFORMATION IN THIS DOCUMENT IS PROPRIETARY AND CONFIDENTIAL AND SHALL NOT BE USED, COPIED, REPRODUCED, OR DISCLOSED WITHOUT PRIOR WRITTEN CONSENT OF EVERSTREAM

PLANS PREPARED BY:
NEESAI CAD DESIGNS

Drawing Information: Facility locations are general in nature and are only intended for approximate location reference. Neesai CAD Deisgns will not be held liable for the accuracy and will not assume responsibility for any damages resulting from these drawings.

LEGEND

E/P = EX. EDGE OF PAVEMENT		OHF = PROP. OVERHEAD FIBER	
C/L = EX. CENTER LINE		B = PROP. BURIED FIBER	
R/W = EX. RIGHT OF WAY		P/L = EX. PROPERTY LINE	

PROPOSED ANCHOR & GUY	PROPOSED HANDHOLE
FOREIGN/EXISTING ANCHOR & GUY	EXISTING HANDHOLE
AERIAL STORAGE LOOP	STORM DRAIN
BURIED STORAGE LOOP	FIRE HYDRANT

SCALE: 1" = 80'

SHEET: 14 OF 22

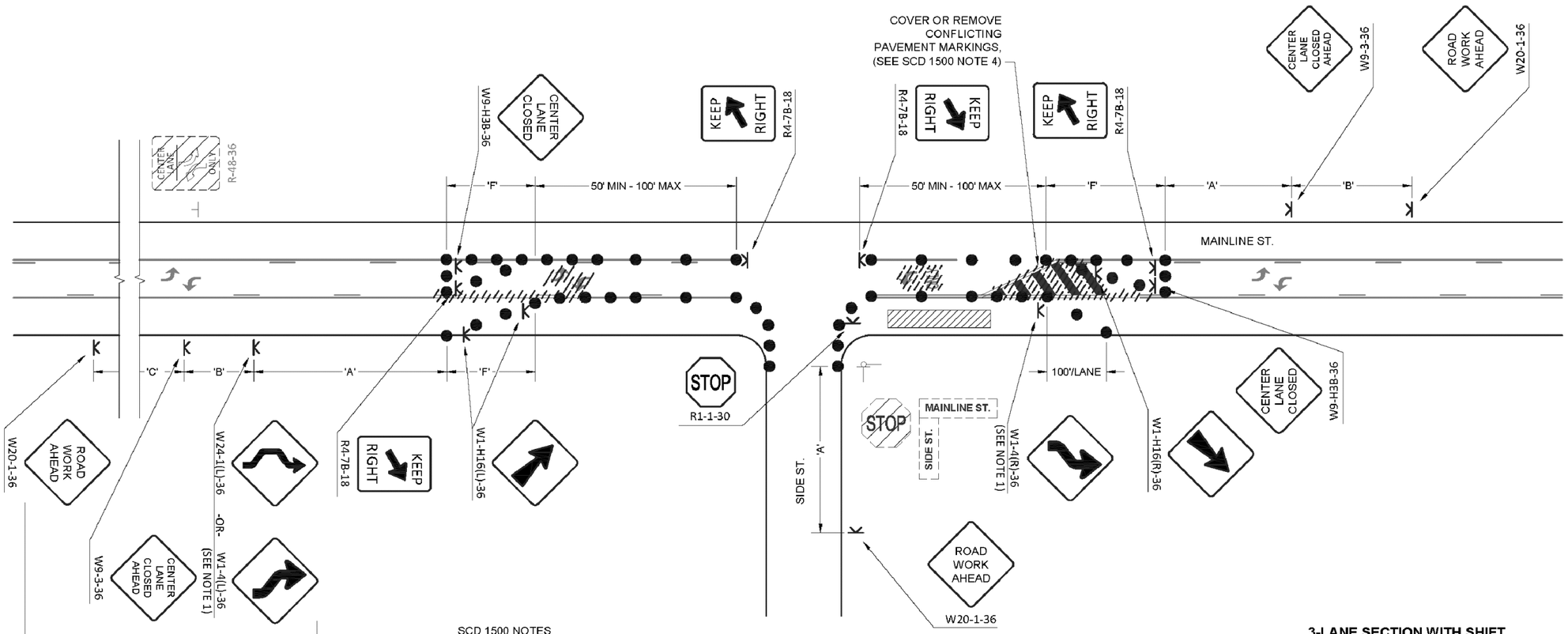

SCD 1500 NOTES

1A. SEE SCD 1500 NOTE 3. TAPER LENGTHS ARE TO BE CALCULATED USING FORMULAS FROM THE SCD 1500, TABLE 1: TAPER LENGTHS FOR TEMPORARY TRAFFIC CONTROL ZONES.

NOTES

1. IF TANGENT DISTANCE ALONG THE TEMPORARY DIVERSION IS LESS THAN 540', A DOUBLE REVERSE CURVE SIGN (W24-1) SHOULD BE USED IN PLACE OF INITIAL REVERSE CURVE SIGN AND THE SECOND REVERSE CURVE SIGN SHALL BE OMITTED.

2. FOR ADVANCE WARNING SIGN ON SIDE STREET APPLICATION PLACE SIGN A MAXIMUM OF 200' FROM STOP LINE OR TRAFFIC CONTROL.

3-LANE SECTION WITH SHIFT

LANE CLOSURES

CITY OF COLUMBUS, OHIO
DEPARTMENT OF PUBLIC SERVICE
DIVISION OF DESIGN AND CONSTRUCTION

CITY ENGINEER

STD DWG 1510

9/15/2015

SHT 3 OF 5

ASBUILT CHANGES / REVISIONS

DATE	DESCRIPTIONS
–	–
–	–
–	–
–	–
–	–

OHIO Utilities Protection SERVICE
Call Before You Dig
1-800-362-2764
OR 8-1-1
CALL TWO WORKING DAYS BEFORE YOU DIG
(NON MEMBERS MUST BE CALLED DIRECTLY)

6040 COLLINGS DR.

DESIGNER: K. KHAY

SCALE BAR = 1:80
0 40 80 120 160

everstream®
FASTER FIBER. BETTER BUSINESS.®

INFORMATION IN THIS DOCUMENT IS PROPRIETARY AND CONFIDENTIAL AND SHALL NOT BE USED, COPIED, REPRODUCED, OR DISCLOSED WITHOUT PRIOR WRITTEN CONSENT OF EVERSTREAM

PLANS PREPARED BY:
NEESAI CAD DESIGNS

Drawing Information: Facility locations are general in nature and are only intended for approximate location reference. Neesai CAD Designs will not be held liable for the accuracy and will not assume responsibility for any damages resulting from these drawings.

LEGEND

E/P	EX. EDGE OF PAVEMENT	OHF	PROP. OVERHEAD FIBER
C/L	EX. CENTER LINE	B	PROP. BURIED FIBER
R/W	EX. RIGHT OF WAY	P/L	EX. PROPERTY LINE

PROPOSED ANCHOR & GUY	PROPOSED HANDHOLE
FOREIGN/EXISTING ANCHOR & GUY	EXISTING HANDHOLE
AERIAL STORAGE LOOP	STORM DRAIN
BURIED STORAGE LOOP	FIRE HYDRANT

SCALE: 1" = 80'

SHEET: 15 OF 22

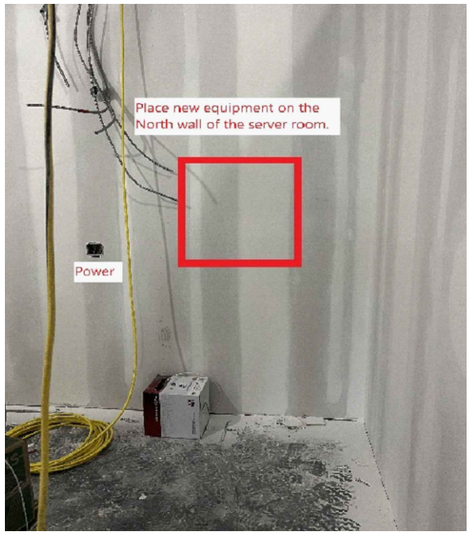

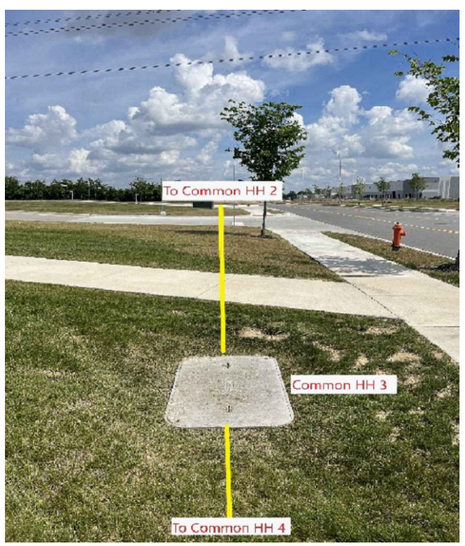

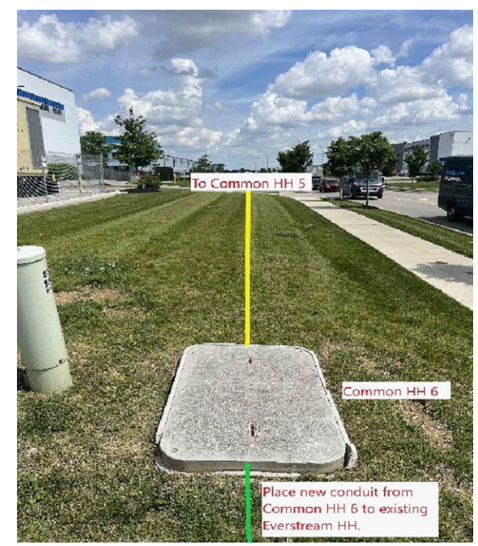

ASBUILT CHANGES / REVISIONS

DATE	DESCRIPTIONS
–	–
–	–
–	–
–	–
–	–

OHIO Utilities Protection SERVICE
Call Before You Dig
1-800-362-2764
OR 8-1-1
CALL TWO WORKING DAYS BEFORE YOU DIG
(NON MEMBERS MUST BE CALLED DIRECTLY)

6040 COLLINGS DR.

DESIGNER: K. KHAY

SCALE BAR = 1:80
0 40 80 120 160

everstream®
FASTER FIBER. BETTER BUSINESS.®

INFORMATION IN THIS DOCUMENT IS PROPRIETARY AND CONFIDENTIAL AND SHALL NOT BE USED, COPIED, REPRODUCED, OR DISCLOSED WITHOUT PRIOR WRITTEN CONSENT OF EVERSTREAM

PLANS PREPARED BY:
NEESAI CAD DESIGNS

Drawing Information: Facility locations are general in nature and are only intended for approximate location reference. Neesai CAD Designs will not be held liable for the accuracy and will not assume responsibility for any damages resulting from these drawings.

LEGEND

E/P = EX. EDGE OF PAVEMENT		OHF = PROP. OVERHEAD FIBER	
C/L = EX. CENTER LINE		B = PROP. BURIED FIBER	
R/W = EX. RIGHT OF WAY		P/L = EX. PROPERTY LINE	

PROPOSED ANCHOR & GUY	PROPOSED HANDHOLE
FOREIGN/EXISTING ANCHOR & GUY	EXISTING HANDHOLE
AERIAL STORAGE LOOP	STORM DRAIN
BURIED STORAGE LOOP	FIRE HYDRANT

SCALE: 1" = 80'

SHEET: 16 OF 22

4' x 4' x 4' FIBERGLASS MANHOLE DETAILS

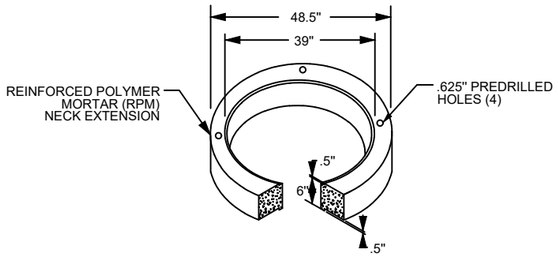

TYPICAL DETAIL - A
NECK EXTENSION

NOTES:
1. EACH COVER TO HAVE (4) PICK SLOTS FOR REMOVING.
2. STAMP "CAPROCK" IN COVER.
3. ACCESS HOLE: 30".

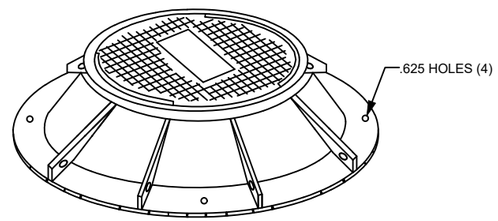

TYPICAL DETAIL - B
MANHOLE COVER
WESTERN IRONWORKS #B=30

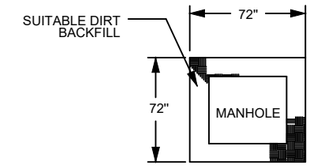

TYPICAL DETAIL - C
EXCAVATION PIT
PLAN VIEW

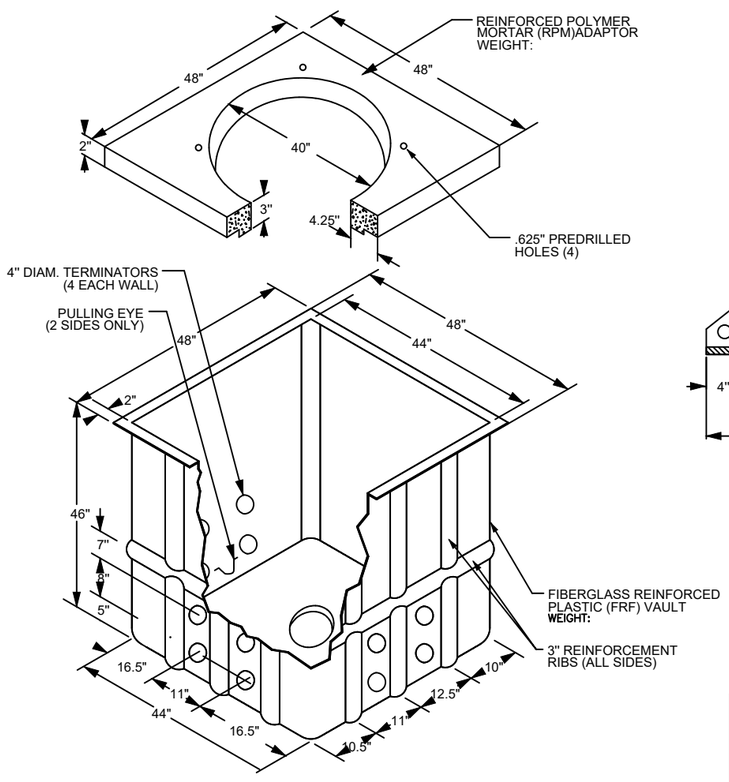

TYPICAL DETAIL - D
MANHOLE ADAPTOR

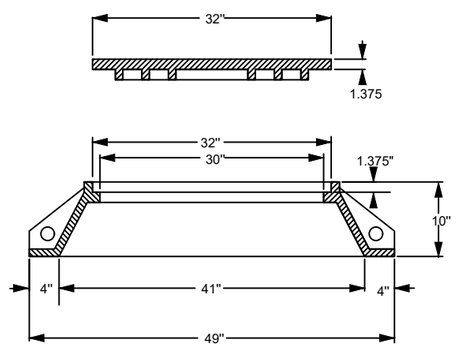

TYPICAL DETAIL - E
RING & COVER DETAIL
RING: 390lbs. COVER: 300lbs.

NOTES:
1. VOID IN EXCAVATED AREAS TO BE BACKFILLED WITH SELECT MATERIAL.
2. BOTTOM OF EXCAVATED PIT TO BE BACKFILLED WITH 12" OF CRUSHED STONE (3/4" GRADE).
3. SHORING WILL BE REQUIRED.
4. ALL MANHOLES SHALL BE PLACED WITH COVER FLUSH WITH EXISTING GRADE.

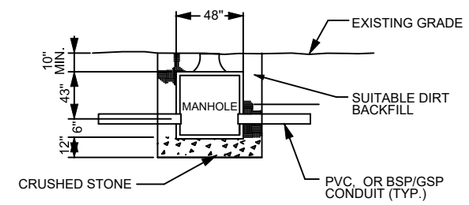

TYPICAL DETAIL - F
EXCAVATION PIT
PROFILE VIEW

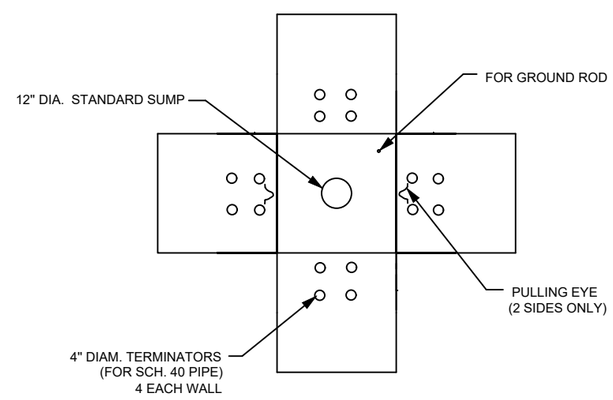

TYPICAL DETAIL - G
4' x 4' x 4' MANHOLE
PLAN VIEW

ASBUILT CHANGES / REVISIONS

DATE	DESCRIPTIONS
–	–
–	–
–	–
–	–
–	–

OHIO Utilities Protection SERVICE
Call Before You Dig
1-800-362-2764
OR 8-1-1
CALL TWO WORKING DAYS BEFORE YOU DIG
(NON MEMBERS MUST BE CALLED DIRECTLY)

6040 COLLINGS DR.

DESIGNER: K. KHAY

everstream®
FASTER FIBER. BETTER BUSINESS.®

INFORMATION IN THIS DOCUMENT IS PROPRIETARY AND CONFIDENTIAL AND SHALL NOT BE USED, COPIED, REPRODUCED, OR DISCLOSED WITHOUT PRIOR WRITTEN CONSENT OF EVERSTREAM

PLANS PREPARED BY:
NEESAI CAD DESIGNS

Drawing Information: Facility locations are general in nature and are only intended for approximate location reference. Neesai CAD Deisgns will not be held liable for the accuracy and will not assume responsibility for any damages resulting from these drawings.

LEGEND

E/P = EX. EDGE OF PAVEMENT	OHF = PROP. OVERHEAD FIBER	PROPOSED ANCHOR & GUY	PROPOSED HANDHOLE
C/L = EX. CENTER LINE	B = PROP. BURIED FIBER	FOREIGN/EXISTING ANCHOR & GUY	EXISTING HANDHOLE
R/W = EX. RIGHT OF WAY	P/L = EX. PROPERTY LINE	AERIAL STORAGE LOOP	STORM DRAIN
		BURIED STORAGE LOOP	FIRE HYDRANT

SCALE: NONE

SHEET: 17 OF 22

4' x 4' x 4' POLYMER CONCRETE MANHOLE DETAILS

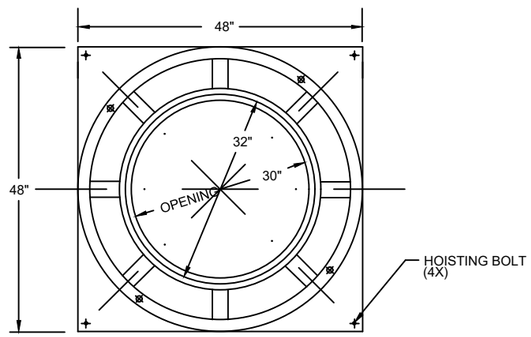

TYPICAL DETAIL - A

MANHOLE TOP VIEW

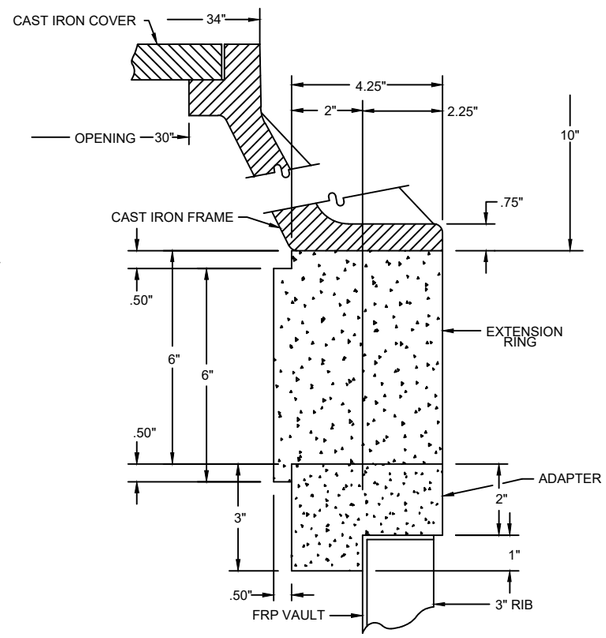

TYPICAL DETAIL - B

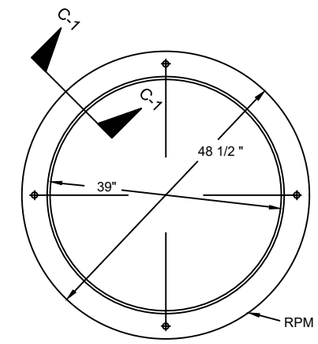

TYPICAL DETAIL - C

EXTENSION RING

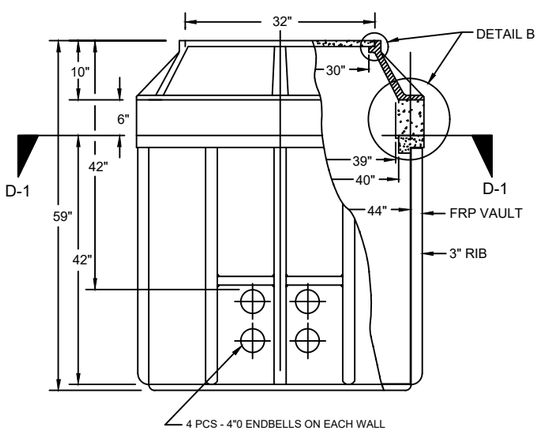

TYPICAL DETAIL - D

MANHOLE FRONT VIEW

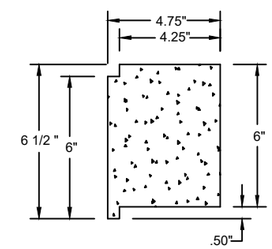

TYPICAL DETAIL - C-1

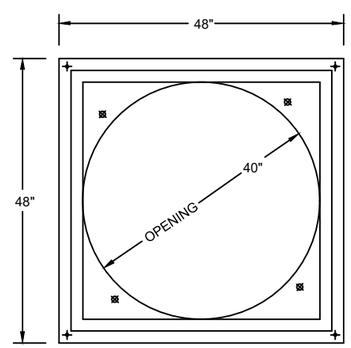

TYPICAL DETAIL - D-1

ADAPTER TOP VIEW

NOTES:

1. USE ARMORCASE POLYMER CONCRETE MANHOLE OR EQUIVALENT.

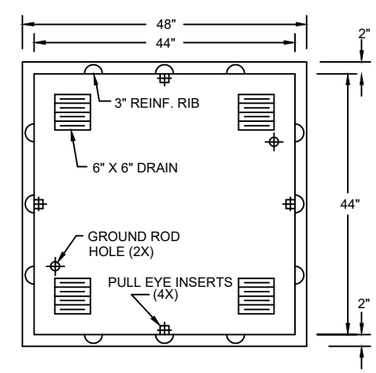

TYPICAL DETAIL - E

VAULT TOP VIEW

ASBUILT CHANGES / REVISIONS

DATE	DESCRIPTIONS
–	–
–	–
–	–
–	–
–	–
–	–

OHIO Utilities Protection SERVICE

Call Before You Dig

1-800-362-2764

OR 8-1-1

CALL TWO WORKING DAYS BEFORE YOU DIG (NON MEMBERS MUST BE CALLED DIRECTLY)

6040 COLLINGS DR.

DESIGNER: K. KHAY

everstream®

FASTER FIBER. BETTER BUSINESS.®

INFORMATION IN THIS DOCUMENT IS PROPRIETARY AND CONFIDENTIAL AND SHALL NOT BE USED, COPIED, REPRODUCED, OR DISCLOSED WITHOUT PRIOR WRITTEN CONSENT OF EVERSTREAM

PLANS PREPARED BY:

NEESAI CAD DESIGNS

Drawing Information: Facility locations are general in nature and are only intended for approximate location reference. Neesai CAD Deisgns will not be held liable for the accuracy and will not assume responsibility for any damages resulting from these drawings.

LEGEND

E/P = EX. EDGE OF PAVEMENT	OHF = PROP. OVERHEAD FIBER	PROPOSED ANCHOR & GUY	PROPOSED HANDHOLE
C/L = EX. CENTER LINE	B = PROP. BURIED FIBER	FOREIGN/EXISTING ANCHOR & GUY	EXISTING HANDHOLE
R/W = EX. RIGHT OF WAY	P/L = EX. PROPERTY LINE	AERIAL STORAGE LOOP	STORM DRAIN
		BURIED STORAGE LOOP	FIRE HYDRANT

SCALE: NONE

SHEET: 18 OF 22

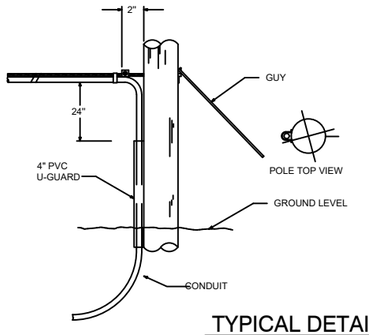

NOTES:

1. EXTEND U-GUARD MIN. 6" BELOW GROUND LEVEL
2. FOR CONDUIT PL. U-GUARD BELOW SURFACE TO CONDUIT ADAPTER.
3. USE STEEL CONDUIT OR U-GUARD FROM BOTTOM OF POLE UP 10'.

TYPICAL DETAIL - A

POLE ARRANGEMENT FOR AERIAL TO BURIED CABLE

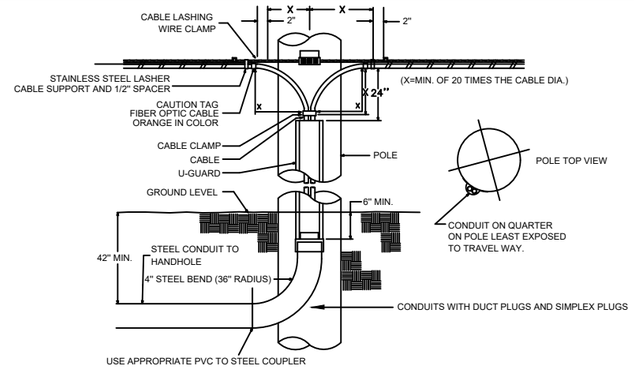

TYPICAL DETAIL - B

POLE ARRANGEMENT FOR REPEATER
OR HANDHOLE LOCATION

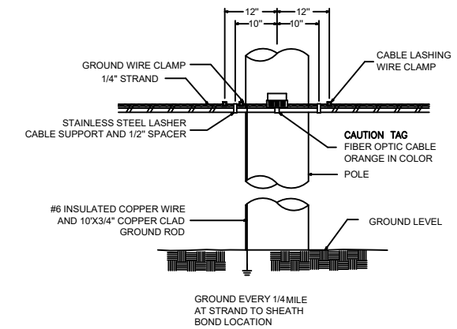

TYPICAL DETAIL - C

TYPICAL CABLE & HARDWARE INSTALLATION
(1/4" STRAND)

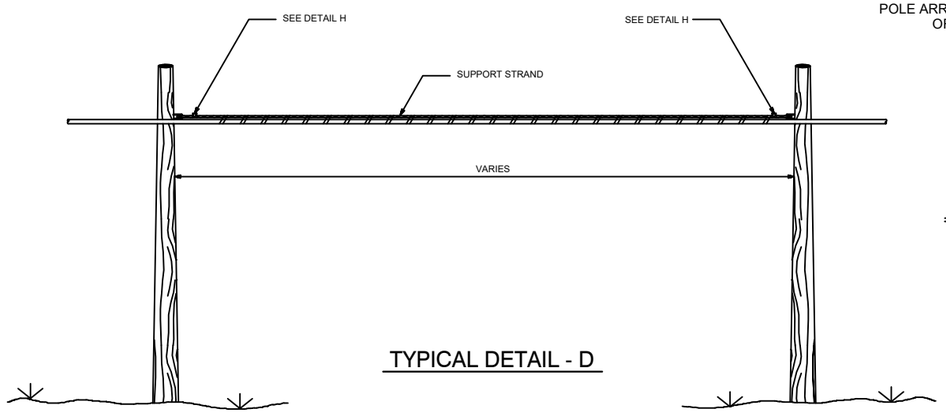

TYPICAL DETAIL - D

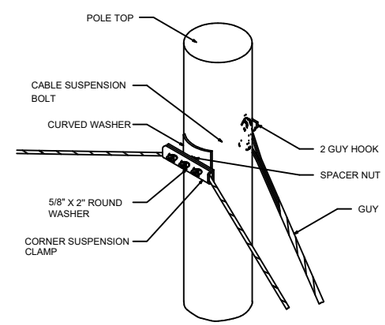

TYPICAL DETAIL - E

SUSPENSION STRAND - PULL AWAY
FROM POLE - 5 FEET OR MORE

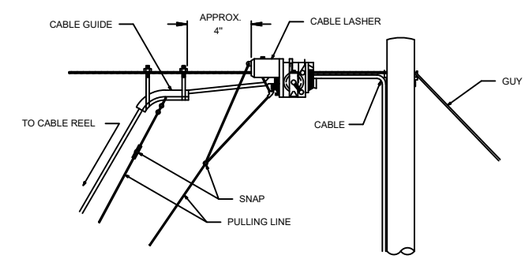

TYPICAL DETAIL - F

TYPICAL ARRANGEMENT OF
CABLE LASHER AND CABLE GUIDE

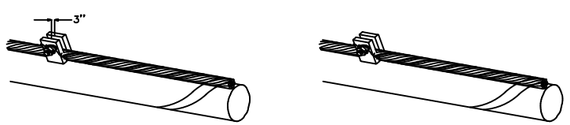

REMOVE ANY SLACK IN THE LASHING WIRE BY MAINTAINING A PULL ON THE WIRE AND TAPPING THE STRAND SHARPLY. THEN FORM THE WIRE OVER THE STUD AND TIGHTEN THE NUT. CUT THE FREE END OF THE LASHING WIRE OFF 3/4" BEYOND THE END OF THE CLAMP.

FORMING WIRE OVER STUD OF CLAMP

FORM THE LASHING WIRE AROUND THE STRAND AND PLACE IT BELOW THE STUD AND BETWEEN THE SECOND WASHER AND STUD SHOULDER.

FORMING LASHING WIRE AROUND STRAND

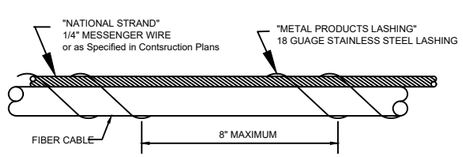

TYPICAL DETAIL - G

JOINING 045 LASHING WIRE

C LASHING WIRE GRIP INSTALLED ON STRAND

D CABLE LASHING CLAMP

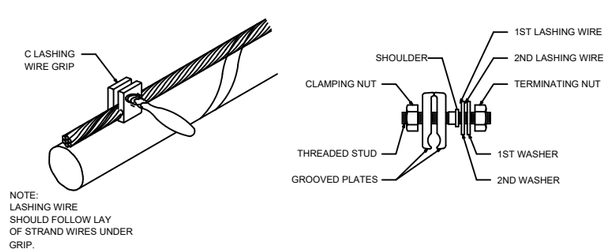

NOTE:
LASHING WIRE
SHOULD FOLLOW LAY
OF STRAND WIRES UNDER
GRIP.

TYPICAL DETAIL - H

LASHING WIRE GRIP AND CLAMP

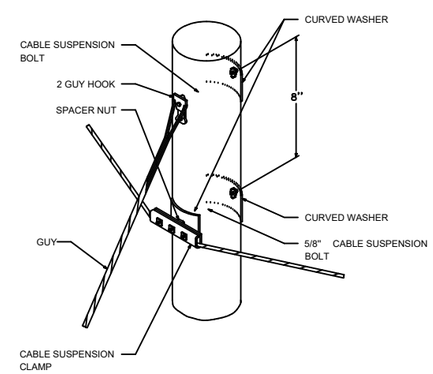

TYPICAL DETAIL - I

SUSPENSION STRAND - PULL TOWARD
POLE - LESS THAN 5 FEET

ASBUILT CHANGES / REVISIONS

DATE	DESCRIPTIONS
–	–
–	–
–	–
–	–
–	–
–	–
–	–

OHIO Utilities Protection SERVICE
Call Before You Dig
1-800-362-2764
OR 8-1-1
CALL TWO WORKING DAYS BEFORE YOU DIG
(NON MEMBERS MUST BE CALLED DIRECTLY)

6040 COLLINGS DR.

DESIGNER: K. KHAY

everstream®
FASTER FIBER. BETTER BUSINESS.®

INFORMATION IN THIS DOCUMENT IS PROPRIETARY AND CONFIDENTIAL AND SHALL NOT BE USED, COPIED, REPRODUCED, OR DISCLOSED WITHOUT PRIOR WRITTEN CONSENT OF EVERSTREAM

PLANS PREPARED BY:
NEESAI CAD DESIGNS

Drawing Information: Facility locations are general in nature and are only intended for approximate location reference. Neesai CAD Deisgns will not be held liable for the accuracy and will not assume responsibility for any damages resulting from these drawings.

LEGEND

E/P	= EX. EDGE OF PAVEMENT	OHF	= PROP. OVERHEAD FIBER		PROPOSED ANCHOR & GUY		PROPOSED HANDHOLE
C/L	= EX. CENTER LINE	B	= PROP. BURIED FIBER		FOREIGN/EXISTING ANCHOR & GUY		EXISTING HANDHOLE
R/W	= EX. RIGHT OF WAY	P/L	= EX. PROPERTY LINE		AERIAL STORAGE LOOP		STORM DRAIN
					BURIED STORAGE LOOP		FIRE HYDRANT

SCALE: NONE

SHEET: 19 OF 22

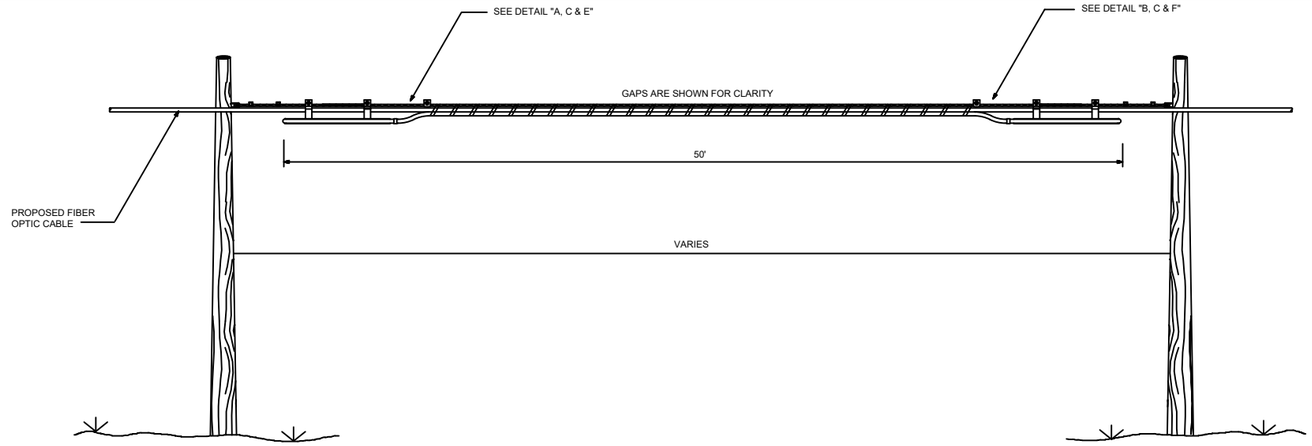

TYPICAL DETAIL FOR STORING CABLE SLACK

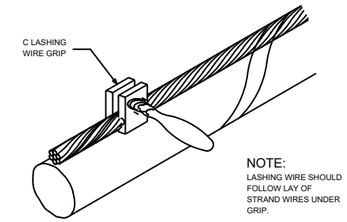

TYPICAL DETAIL - C

LASHING WIRE GRIP AND CLAMP
C LASHING WIRE GRIP INSTALLED ON STRAND

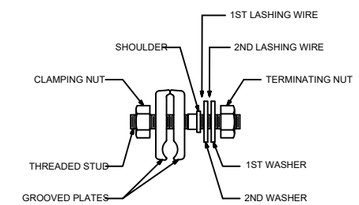

TYPICAL DETAIL - D

CABLE LASHING CLAMP

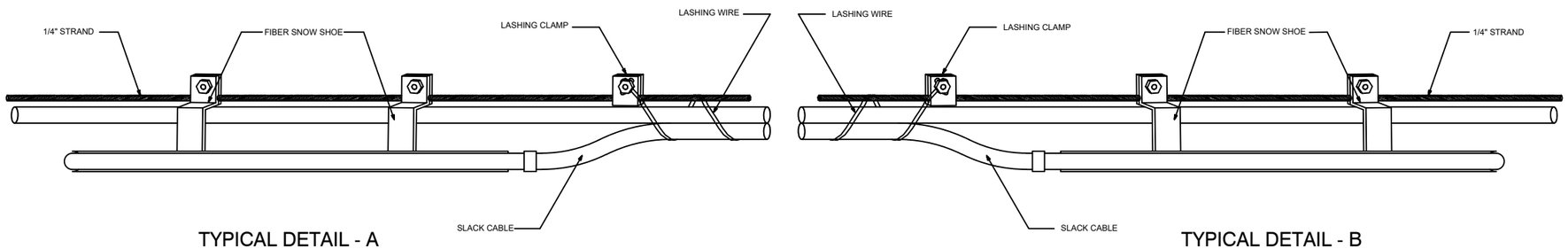

TYPICAL DETAIL - A

TYPICAL DETAIL - B

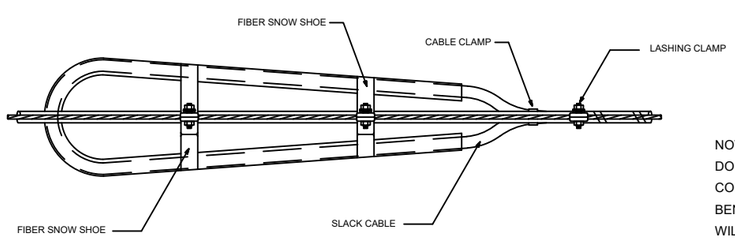

TYPICAL DETAIL - E

NOTE:
DO NOT EXCEED THE MANUFACTURERS SPECIFICATIONS CONCERNING MINIMUM BENDING RADIUS. THE MINIMUM BENDING RADIUS OF FIBER OPTIC CABLE UNDER TENSION WILL NOT EXCEED 20 TIMES THE CABLE DIAMETER.

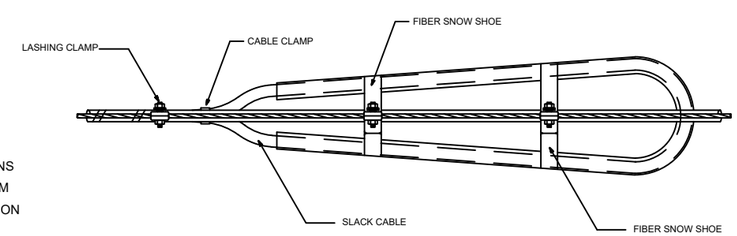

TYPICAL DETAIL - F

ASBUILT CHANGES / REVISIONS

DATE	DESCRIPTIONS
–	–
–	–
–	–
–	–
–	–

OHIO Utilities Protection SERVICE
Call Before You Dig
1-800-362-2764
OR 8-1-1
CALL TWO WORKING DAYS BEFORE YOU DIG
(NON MEMBERS MUST BE CALLED DIRECTLY)

6040 COLLINGS DR.

DESIGNER: K. KHAY

everstream®
FASTER FIBER. BETTER BUSINESS.®

INFORMATION IN THIS DOCUMENT IS PROPRIETARY AND CONFIDENTIAL AND SHALL NOT BE USED, COPIED, REPRODUCED, OR DISCLOSED WITHOUT PRIOR WRITTEN CONSENT OF EVERSTREAM

PLANS PREPARED BY:
NEESAI CAD DESIGNS

Drawing Information: Facility locations are general in nature and are only intended for approximate location reference. Neesai CAD Deisgns will not be held liable for the accuracy and will not assume responsibility for any damages resulting from these drawings.

LEGEND

E/P = EX. EDGE OF PAVEMENT		OHF = PROP. OVERHEAD FIBER	
C/L = EX. CENTER LINE		B = PROP. BURIED FIBER	
R/W = EX. RIGHT OF WAY		P/L = EX. PROPERTY LINE	

PROPOSED ANCHOR & GUY	PROPOSED HANDHOLE
FOREIGN/EXISTING ANCHOR & GUY	EXISTING HANDHOLE
AERIAL STORAGE LOOP	STORM DRAIN
BURIED STORAGE LOOP	FIRE HYDRANT

SCALE: NONE

SHEET: 20 OF 22

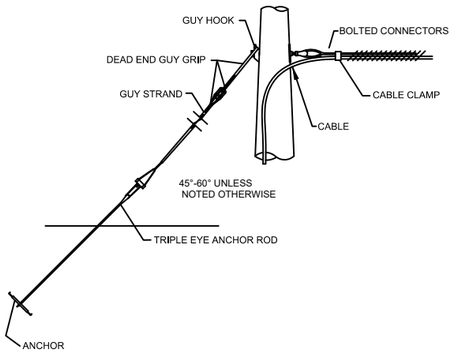

TYPICAL DEAD END DOWNGUY DETAIL
NTS

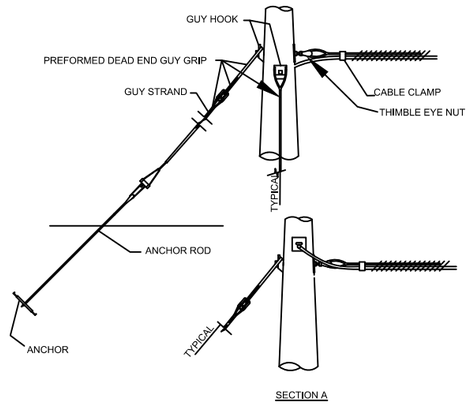

TYPICAL COMMON CORNER DOWNGUY DETAIL
NTS

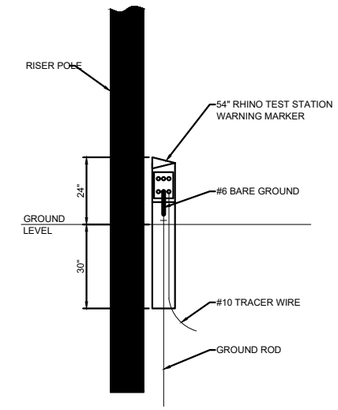

TRACER WIRE GROUNDING WITH RHINO TEST STATION
NTS

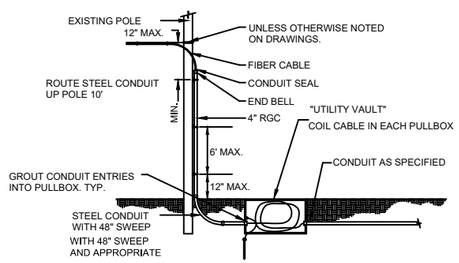

TYPICAL AERIAL TO UNDERGROUND DETAIL
NTS

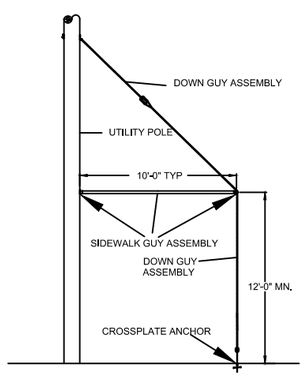

TYPICAL SIDEWALK GUY DETAIL
NTS

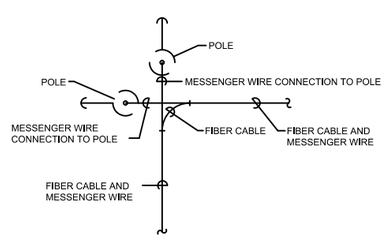

CORNER/DEAD END POLE DOWN GUY
NTS

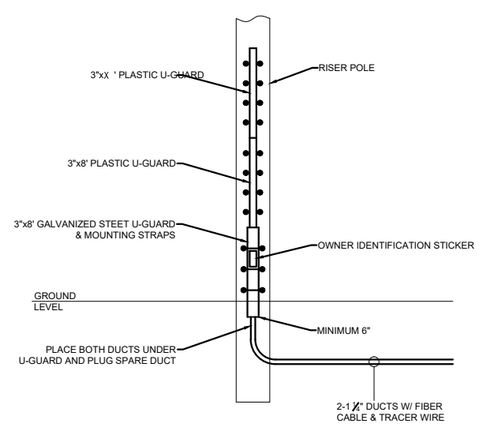

RISER GUARD INSTALLATION
NTS

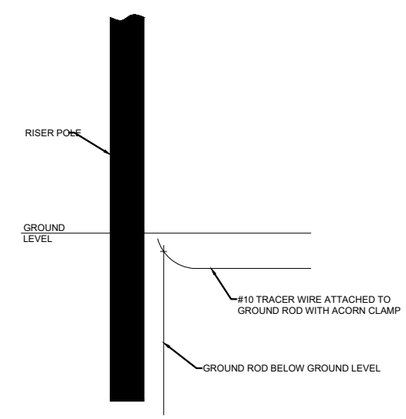

TRACER WIRE GROUNDING AT RISER POLE
NTS

ASBUILT CHANGES / REVISIONS

DATE	DESCRIPTIONS
—	—
—	—
—	—
—	—
—	—

OHIO Utilities Protection SERVICE
Call Before You Dig
1-800-362-2764
OR 8-1-1
CALL TWO WORKING DAYS BEFORE YOU DIG
(NON MEMBERS MUST BE CALLED DIRECTLY)

6040 COLLINGS DR.

DESIGNER: K. KHAY

everstream®
FASTER FIBER. BETTER BUSINESS.®

INFORMATION IN THIS DOCUMENT IS PROPRIETARY AND CONFIDENTIAL AND SHALL NOT BE USED, COPIED, REPRODUCED, OR DISCLOSED WITHOUT PRIOR WRITTEN CONSENT OF EVERSTREAM

PLANS PREPARED BY:
NEESAI CAD DESIGNS

Drawing Information: Facility locations are general in nature and are only intended for approximate location reference. Neesai CAD Deisgns will not be held liable for the accuracy and will not assume responsibility for any damages resulting from these drawings.

LEGEND

E/P	= EX. EDGE OF PAVEMENT	OHF	= PROP. OVERHEAD FIBER		PROPOSED ANCHOR & GUY		PROPOSED HANDHOLE
C/L	= EX. CENTER LINE	B	= PROP. BURIED FIBER		FOREIGN/EXISTING ANCHOR & GUY		EXISTING HANDHOLE
R/W	= EX. RIGHT OF WAY	P/L	= EX. PROPERTY LINE		AERIAL STORAGE LOOP		STORM DRAIN
					BURIED STORAGE LOOP		FIRE HYDRANT

SCALE: NONE

SHEET: 21 OF 22

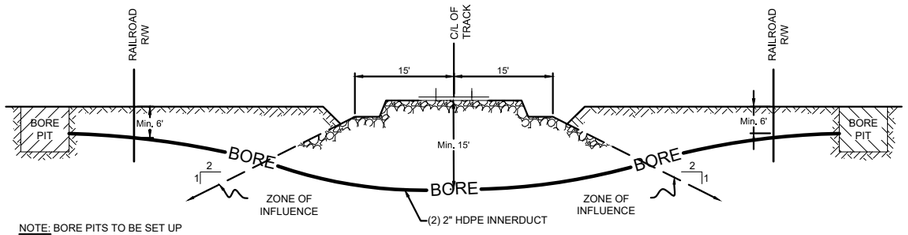

NOTE: BORE PITS TO BE SET UP OUTSIDE RAILROAD RIGHT OF WAY.

RAILROAD CROSSING DETAIL
NTS

***CONTRACTOR MUST REFERENCE AND INSTALL DUCT PER APPROVED RAILROAD PERMIT PLAN AND PROFILE AT RAILROAD ENCROACHMENT CROSSING.**

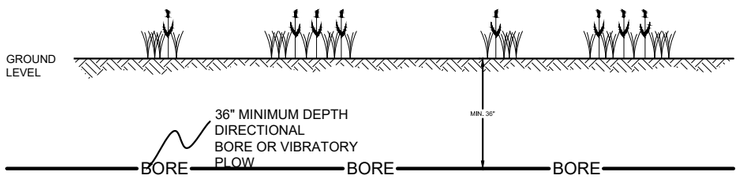

TYPICAL WETLAND CROSSING
NTS

NOTE: BORE PITS TO BE SET UP OUTSIDE OF WETLAND BOUNDARIES UNLESS OTHERWISE NOTED ON PRINTS.

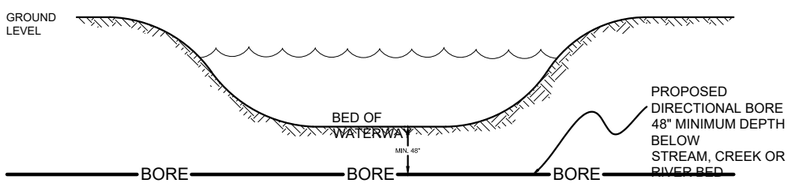

TYPICAL WATERWAY CROSSING
NTS

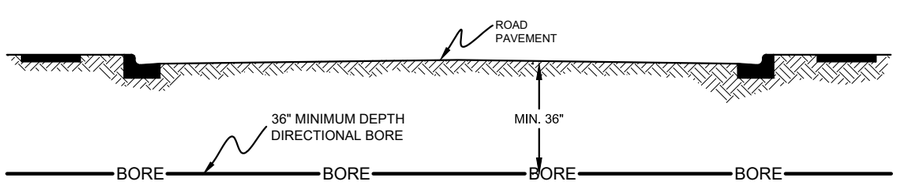

TYPICAL ROADWAY CROSSING
NTS

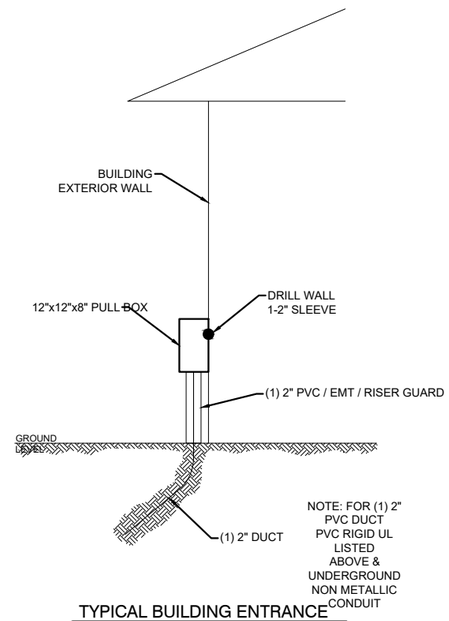

TYPICAL BUILDING ENTRANCE
NTS

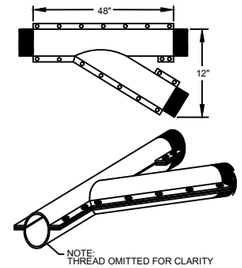

SPLIT BSP FLANGED WYE
NTS

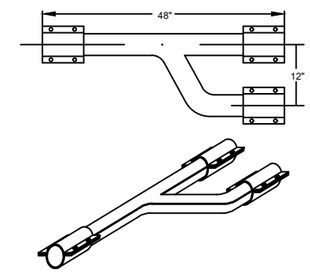

SPLIT BSP BRANCH WYE W/ COUPLINGS
NTS

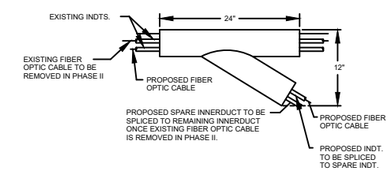

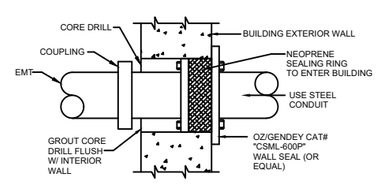

CONDUIT SEAL DETAIL
NTS

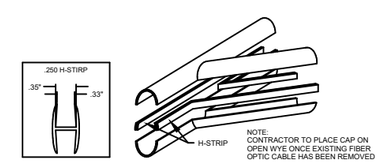

SPLIT PVC BRANCH WYE W/ H-STRIP
NTS

ASBUILT CHANGES / REVISIONS

DATE	DESCRIPTIONS
—	—
—	—
—	—
—	—
—	—

OHIO Utilities Protection SERVICE
Call Before You Dig
1-800-362-2764
OR 8-1-1
CALL TWO WORKING DAYS BEFORE YOU DIG (NON MEMBERS MUST BE CALLED DIRECTLY)

6040 COLLINGS DR.

DESIGNER: K. KHAY

everstream®
FASTER FIBER. BETTER BUSINESS.®

INFORMATION IN THIS DOCUMENT IS PROPRIETARY AND CONFIDENTIAL AND SHALL NOT BE USED, COPIED, REPRODUCED, OR DISCLOSED WITHOUT PRIOR WRITTEN CONSENT OF EVERSTREAM

PLANS PREPARED BY:
NEESAI CAD DESIGNS

Drawing Information: Facility locations are general in nature and are only intended for approximate location reference. Neesai CAD Deisgns will not be held liable for the accuracy and will not assume responsibility for any damages resulting from these drawings.

LEGEND

E/P = EX. EDGE OF PAVEMENT		OHF = PROP. OVERHEAD FIBER	
C/L = EX. CENTER LINE		B = PROP. BURIED FIBER	
R/W = EX. RIGHT OF WAY		P/L = EX. PROPERTY LINE	
PROPOSED ANCHOR & GUY		PROPOSED HANDHOLE	
FOREIGN/EXISTING ANCHOR & GUY		EXISTING HANDHOLE	
AERIAL STORAGE LOOP		STORM DRAIN	
BURIED STORAGE LOOP		FIRE HYDRANT	

SCALE: NONE

SHEET: 22 OF 22

EVERSTREAM
SITE ADDRESS: 6040 COLLINGS DR.
LOCKBOURNE, OH 43137
SITE ID: EV-ETHS-ON-134874
ES IMP TICKET: IMP 134874
(SOF-134874)

TOTAL FOC RATE CARD			
	UNITS	ESTIMATED QUANTITY	ACTUAL QUANTITY
FOC AERIAL	FT	0	0
FOC BURIED	FT	4205	0
1-2" HDPE	FT	472	0
HANDHOLE 24"X36"X40"	EACH	0	0
EMT	FT	0	0

CONSTRUCTION NOTES

1. LEAVE 30' COILED AT TERMINATION POINT.
2. LEAVE 75' COILED IN EACH VAULT.
3. LEAVE 150' OF SLACK FOR EVERY 1500' OF LASHED CABLE IN RURAL AREAS, 120' OF SLACK FOR EVERY 1000' OF LASHED CABLE IN URBAN AREAS.
4. BORE A NEW 48F 500' FROM EXISTING EVERSTREAM HH AT THE FRONT OF 1345 LONDON GROVEPORT RD WEST ON LONDON GROVEPORT RD AND THEN NORTH ON COLLINGS DR TO COMMON HH 6.
5. PULL 2898' OF NEW 48F NORTH ON COLLINGS DR FROM COMMON HH 6 TO COMMON HH 2. PULL 735' OF NEW 48F FROM COMMON HH 2 EAST ON THE ACCESS RD TO COMMON HH 1. PULL 705' OF NEW 48F NORTH FROM HH 1 INTO THE SERVER ROOM AND PLACE NEW FIBER AND EQUIPMENT ON THE NORTH WALL.
6. CONTRACTOR SHALL REPLACE ALL DRIVEWAYS, SIDEWALKS, OR OTHER DISTURB SURFACES TO A CONDITION EQUAL TO OR BETTER THAN THE PRIOR EXISTING CONDITIONS.
7. CONTRACTOR SHALL MAINTAIN ACCESS TO ALL ADJACENT PROPERTIES DURING CONSTRUCTION OPERATIONS.
8. CONTRACTOR SHALL BE RESPONSIBLE FOR VERIFYING AND LOCATING ALL SERVICES PRIOR TO BEGINNING ANY EXCAVATION.
9. CONTRACTOR SHALL MAINTAIN A MINIMUM OF 3' HORIZONTAL AND 1' VERTICAL CLEARANCE FROM ALL WATER AND SEWER LINES.

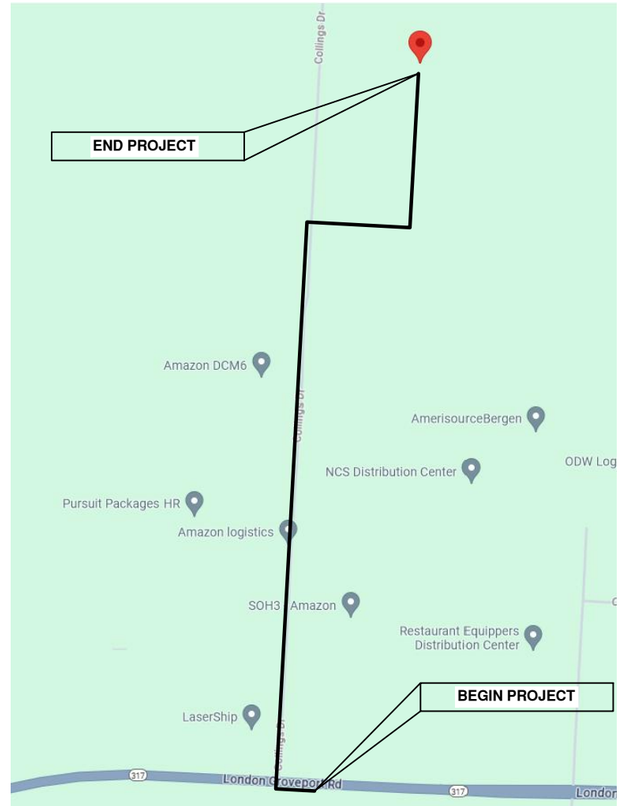

SHEET INDEX:

SHEET 1.....SITE MAP & NOTES
SHEET 2.....GENERAL NOTES
SHEET 3–4.....TRAFFIC CONTROL NOTES
SHEET 5–12.....PLAN & PROFILE
SHEET 13–15.....MOT
SHEET 16.....PHOTOS
SHEET 17–22.....DETAILS

CONTACT INFORMATION

EVERSTREAM
JOHN STEVENS
380-209-5936

N

ASBUILT CHANGES / REVISIONS

DATE	DESCRIPTIONS
–	–
–	–
–	–
–	–
–	–

OHIO Utilities Protection SERVICE
Call Before You Dig
1-800-362-2764
OR 8-1-1
CALL TWO WORKING DAYS BEFORE YOU DIG
(NON MEMBERS MUST BE CALLED DIRECTLY)

6040 COLLINGS DR.

DESIGNER: K. KHAY

everstream®
FASTER FIBER. BETTER BUSINESS.®

INFORMATION IN THIS DOCUMENT IS PROPRIETARY AND CONFIDENTIAL AND SHALL NOT BE USED, COPIED, REPRODUCED, OR DISCLOSED WITHOUT PRIOR WRITTEN CONSENT OF EVERSTREAM

PLANS PREPARED BY:
NEESAI CAD DESIGNS

Drawing Information: Facility locations are general in nature and are only intended for approximate location reference. Neesai CAD Deisgns will not be held liable for the accuracy and will not assume responsibility for any damages resulting from these drawings.

LEGEND

E/P = EX. EDGE OF PAVEMENT		OHF = PROP. OVERHEAD FIBER	
C/L = EX. CENTER LINE		B = PROP. BURIED FIBER	
R/W = EX. RIGHT OF WAY		P/L = EX. PROPERTY LINE	

PROPOSED ANCHOR & GUY	PROPOSED HANDHOLE
FOREIGN/EXISTING ANCHOR & GUY	EXISTING HANDHOLE
AERIAL STORAGE LOOP	STORM DRAIN
BURIED STORAGE LOOP	FIRE HYDRANT

SCALE: NONE

SHEET: 1 OF 22

GENERAL NOTES FOR THE DIVISION OF SEWERS AND DRAINS:

UTILITY LOCATORS WILL ONLY LOCATE AND MARK MAINLINE SEWERS, AFTER AN OH-811 LOCATE REQUEST IS PLACED. THE CONTRACTOR IS RESPONSIBLE FOR FIELD VERIFYING THE LOCATION OF ALL MAIN LINE SEWERS AND LOCATING ALL PRIVATE SEWER SERVICE LATERALS. THE CONTRACTOR WILL BE HELD RESPONSIBLE FOR ANY DAMAGES TO SEWER MAINS AND/OR SERVICE LATERALS CAUSED DURING CONSTRUCTION. ALL REPAIRS TO THE SEWER LINES AND/OR SERVICE LATERALS MUST BE COMPLETED BY A CITY OF COLUMBUS LICENSED SEWER CONTRACTOR UNDER A SEPARATE SEWER PERMIT.

THE CONTRACTOR MUST MAINTAIN A 3' HORIZONTAL & 1' VERTICAL CLEARANCE FROM THE O.D. OF ALL SEWERS AND APPURTENANCES TO THE NEAREST EDGE OF THE FACILITY BEING PLACED. FOR BRICK SEWERS MAINTAIN 10' HORIZONTAL & 5' VERTICAL CLEARANCE FROM O.D. TO NEAREST EDGE OF PROPOSED FACILITY.

SEE SPECIFIC NOTE FOR PROPOSED SEWERS

PAVEMENT CUTTING, SAWING AND EXCAVATION OPERATIONS NOTE:

ALL PUBLIC AGENCIES AND PRIVATE CONTRACTORS PERFORMING PAVEMENT-CUTTING OPERATIONS ON CITY OF COLUMBUS STREETS AND ROADWAYS SHALL PROTECT THE ENVIRONMENT FROM DISCHARGES CREATED BY THEIR PAVEMENT CUTTING OPERATIONS. NOTE THAT COLUMBUS CITY CODE 1145 PROHIBITS NON-STORM WATER DISCHARGE INTO THE CITY OF COLUMBUS SEWER SYSTEM, CURB INLETS AND ANY PART OF ITS MS4 (MUNICIPAL SEPARATE STORM SEWER SYSTEM).

THE REQUIREMENT INCLUDES BUT IS NOT LIMITED TO WET OR DRY SAW-CUTTING, JACK HAMMERING, EXCAVATION EQUIPMENT USE, ETC. THE PUBLIC AGENCY AND/OR PRIVATE CONTRACTOR WORK CREWS SHALL RECOVER AND DISPOSE OF DEBRIS, POLLUTED WATERS, OR SUCH DISCHARGES RESULTING FROM THEIR PAVEMENT CUTTING OPERATIONS AND PROTECT ALL STORM SEWER INLETS FROM RECEIVING ANY DISCHARGES FROM THE CONSTRUCTION OPERATIONS. THE AGENCY OR CONTRACTOR RESPONSIBLE FOR EACH PAVEMENT CUTTING ACTIVITY SHALL BE SOLELY LIABLE FOR NOTICE OF VIOLATIONS (NOV/S) AND FINES ISSUED BY CITY OF COLUMBUS AND/OR STATE OF OHIO AUTHORITIES.

EQUIPMENT, MATERIALS AND METHODS SHALL BE PROVIDED BY THE RESPONSIBLE PUBLIC AGENCY AND/OR PRIVATE CONTRACTOR TO WORK CREWS PERFORMING THE PAVEMENT CUTTING ACTIVITY AND MADE AVAILABLE TO WORK CREWS FOR USE IN CLEANING UP DISCHARGES RESULTING FROM SUCH CUTTING ACTIVITIES AND PREVENTING RUNOFF. ALL WORK CREWS SHALL BE TRAINED TO EXERCISE AND EMPLOY EQUIPMENT, MATERIALS, AND ENVIRONMENTAL PROTECTIVE MEASURES TO PREVENT POLLUTED DISCHARGES FROM ENTERING THE CITY OF COLUMBUS STORM SEWER SYSTEM AND WATERS OF THE STATE OF OHIO.
THE PUBLIC AGENCY AND/OR PRIVATE CONTRACTORS ARE SOLELY RESPONSIBLE FOR ENSURING THAT THE INLET PROTECTION IS ADEQUATE. THE MOST STRINGENT PROJECT PLANS, NOTES AND/OR DRAWINGS INCLUDING STORM WATER POLLUTION PREVENTION PLAN (SWP3) OR SPILL PREVENTION/REMEDIATION PLAN SHALL APPLY TO ALL PAVEMENT CUTTING, SAWING OR EXCAVATION OPERATIONS.

IN CASE OF EMERGENCY CONTACT:
CITY OF COLUMBUS DIVISION OF SEWERAGE & DRAINAGE
1250 FAIRWOOD AVENUE, COLUMBUS, OHIO 43206
PHONE: 614-645-7102 (SMOC 24/7 DISPATCH LINE)

FOR THE DIVISION OF POWER

THE DIVISION OF POWER (DOP) MAY HAVE UNDERGROUND OR OVERHEAD PRIMARY POWER, SECONDARY POWER, CONDUIT SYSTEMS AND STREET LIGHTING AT THIS WORK LOCATION. THE CONTRACTOR IS HEREBY REQUIRED TO CONTACT OHIO 811 AT 811 OR 1-800-362-2764 FORTY-EIGHT (48) HOURS PRIOR TO CONDUCTING ANY ACTIVITY WITHIN THE CONSTRUCTION AREA.

ANY REQUIRED RELOCATION, SUPPORT, PROTECTION, OR ANY OTHER ACTIVITY CONCERNED WITH THE CITY'S ELECTRICAL FACILITIES IN THE CONSTRUCTION AREA IS TO BE PERFORMED BY THE CONTRACTOR UNDER THE DIRECTION OF DOP PERSONNEL AT THE EXPENSE OF THE PROJECT. DOP SHALL MAKE ALL FINAL CONNECTIONS TO DOP'S EXISTING ELECTRICAL SYSTEM AT THE EXPENSE OF THE PROJECT. THE CONTRACTOR SHALL USE MATERIAL AND MAKE REPAIRS TO A CITY OF COLUMBUS STREET LIGHTING SYSTEM BY FOLLOWING DOP'S "MATERIAL AND INSTALLATION SPECIFICATIONS (MIS) AND THE CITY OF COLUMBUS "CONSTRUCTION AND MATERIALS SPECIFICATIONS (CMSC). ANY NEW OR RE- INSTALLED UNDERGROUND STREETLIGHT SYSTEM SHALL REQUIRE TESTING AS REFERRED TO IN SECTION 1001.18 OF THE CMSC MANUAL. THE CONTRACTOR SHALL CONFORM TO DOP'S EXISTING STREET LIGHTING LOCKOUT/TAGOUT (LOTO) PROCEDURE, MIS-01, COPIES OF WHICH ARE AVAILABLE FORM DOP

IF ANY ELECTRIC FACILITY BELONGING TO DOP IS DAMAGED IN ANY MANNER BY THE CONTRACTOR, ITS AGENTS, SERVANTS, OR EMPLOYEES, AND REQUIRES EMERGENCY REPAIRS, THE DOP DISPATCH OFFICE SHOULD BE CONTACTED IMMEDIATELY AT (614) 645-7627. DOP SHALL MAKE ALL NECESSARY REPAIRS, AND THE EXPENSE OF SUCH REPAIRS AND OTHER RELATED COSTS SHALL BE PAID BY THE CONTRACTOR TO THE DIVISION OF POWER, CITY OF COLUMBUS, OHIO.

IN CASE OF EMERGENCY CONTACT:
DIVISION OF POWER
910 DUBLIN ROAD, COLUMBUS, OHIO 43215
PHONE: 614-645-7788

WATER NOTES:

EXPOSE WATER LINE AT CROSSING(S) TO VERIFY DEPTH AND LOCATIONPRIOR TO AND DURING ANY DIRECTIONAL BORING.

THE CONTRACTOR IS RESPONSIBLE FOR LOCATED ALL CUSTOMERS OWNED SERVICE LINES. THE CONTRACTOR SHALL FIELD VERIFY THE HORIZONTAL AND VERTICAL LOCATION OF ANY CITY OR CUSTOMER OWNED MAIN OR SERVICE LINE THAT MAY BE AFFECTED BY THE PROPOSED CONSTRUCTION ACTIVITIES. FIELD VERIFICATION SHALL TAKE PLACE PRIOR TO AN ACTIVITY THAT MAY JEOPARDIZE THE INTEGRITY OF THE FACILITY AND AT A LOCATION NEAREST THE POINT OF POSSIBLE CONFLICT.

ANY REPAIR TO CITY OR CUSTOMER OWNED WATER LINES ARE THE RESPONSIBILITY OF THE CONTRACTOR. THE CONTRACTOR SHALL CONTACT THE CITY OF COLUMBUS, DIVISION OF WATER AT 614-645-7788 PRIOR TO ANY REPAIRS ON CITY OWNED WATER FACILITIES. THE CONTRACTOR MUST BE A CITY OF COLUMBUS LICENSED WATER CONTRACTOR. THE CONTRACTOR SHALL MAINTAIN A MINIMUM OF 3' HORIZONTAL AND 1' VERTICAL CLEARANCE FROM THE OUTSIDE DIAMETER OF ALL WATER LINES AT 8' FROM ANY "TEE" CONNECTION, BANDS, AND ENDS OF THE WATER LINES, FROM OUTSIDE DIAMETER TO THE NEAREST EDGE OF THE FACILITY BEING PLACED.

IF DURING EXCAVATION, THE POLYETHYLENE ENCASEMENT OF THE EXISTING WATER MAIN BECOMES DAMAGED, THE CONTRACTOR SHALL REPAIR THE POLYETHYLENE ENCASEMENT PER MANUFACTURE'S SPECIFICATIONS AND DOW STANDARD DRAWINGS L-1003 AND L-1004, AT THEIR OWN EXPENSE. ENSURE THAT THE ENTIRE EXPOSED AREA SHALL BE COVERED WITH NEW POLYETHYLENE ENCASEMENT AND SECURELY TAPED, PRIOR TO BACKFILL.

IF THE ALIGNMENT OF THE PROPOSED INFRASTRUCTURE IS CROSSING OR IS PARALLEL (WITHIN IN 5-FEET) OF A 20-INCH OR LARGER PRESTRESSED CONCRETE CYLINDER PIPE (PCCP), THE FOLLOWING NOTE MUST BE INCLUDED ON THE PLAN SUBMITTED FOR WATER REVIEW:

PRIOR TO INSTALLATION OF THE PROPOSED INFRASTRUCTURE THAT IS TO CROSS OR IS PARALLEL (WITHIN IN 5-FEET) OF THE IDENTIFIED PRESTRESSED CONCRETE CYLINDER PIPE (PCCP), THE CONTRACTOR SHALL EXPOSE THE EXISTING PCCP WATER MAIN. THE PCCP WATER MAIN SHALL BE EXPOSED SUFFICIENTLY ENOUGH TO VERIFY THAT NO DAMAGE WILL OCCUR DURING INSTALLATION OF PROPOSED INFRASTRUCTURE.

WHEN PARALLELING, THE EXISTING PCCP WATER MAIN SHALL BE EXPOSED AT THE BEGINNING, END AND EVERY 100-FEET THROUGH THE PROPOSED INFRASTRUCTURE ALIGNMENT. WHEN CROSSING, THE EXISTING PCCP WATER MAIN SHALL BE EXPOSED WHERE THE PROPOSED INFRASTRUCTURE CROSSES THE EXISTING PCCP WATER MAIN.

A CITY INSPECTOR WILL BE REQUIRED TO BE ON-SITE TO WITNESS THE EXCAVATION OF THE EXISTING PCCP WATER MAIN. THE CONTRACTOR IS TO CONTACT THE DPS DIVISION OF DESIGN & CONSTRUCTION AT 614-645-0433 TO SCHEDULE THE INSPECTION.

IF A LEAD OR GALVANIZED WATER SERVICE LINE IS ENCOUNTERED AND NOT DAMAGED, THE CONTRACTOR SHALL REPORT THE PRESENCE OF THE TAP VIA EMAIL TO WATERQUALITY@COLUMBUS.GOV. INCLUDE THE SITE'S ADDRESS AND A PHOTO OF THE TAP IN THE EMAIL. IF THE SERVICE IS DAMAGED, IMMEDIATELY CONTACT THE DIVISION OF WATER DISTRIBUTION ENGINEERING OFFICE AT 614-645-7677 TO REQUEST THE SHUT OFF OF THE EXISTING CURB STOP.

DIVISION OF FORESTRY

TREES MAY EXIST IN THE ROW IN VARIOUS LOCATIONS ALONG THIS PROJECT. ALL EXCAVATIONS, OPEN TRENCHES, OR BORE PITS LOCATED WITHIN 15 FEET OF THE TRUNK OF A TREE WILL REQUIRE INSPECTION PRIOR TO BACKFILLING. CALL FORESTRY AT 614/645-5238 TO SCHEDULE ALL INSPECTIONS. EXCAVATIONS NEAR TREES THAT ARE BACKFILLED PRIOR TO INSPECTION WILL RESULT IN THE TREE AND STUMP NEEDING TO BE REMOVED AT THE EXPENSE OF THE PERMIT HOLDER SINCE PROPER INSPECTION OF ANY ROOT DAMAGE WOULD NO LONGER BE POSSIBLE.

APPLICANT MUST CONTACT THE CITY'S DIVISION OF FORESTRY (614-645-6648) PRIOR TO ANY IMPACT TO ANY PUBLIC VEGETATION, THIS INCLUDES THE CUTTING OF TREE ROOTS AND BRANCHES, BUSHES, OR LANDSCAPE AREA WITHIN THE CITY'S PUBLIC RIGHTS-OF-WAY. PUBLIC TREES WILL BE PROTECTED AGAINST INJURY OF DAMAGE TO BRANCHES, TRUNKS OR ROOTS FROM CONSTRUCTION AND EXCAVATION CONSTRUCTION MATERIALS AND EXCAVATION DERBIES, CHEMICALS, FUEL, EQUIPMENT OR VEHICLES, ARE NOT TO BE STOCKPILED, STORED, THE DRIP-LINE OF PUBLIC TREES. FAILURE TO CONTACT THE CITY FORESTER WILL RESULT IN THE APPLICANT REIMBURSING THE DIVISION FOR THE COST DETERMINED BY THE CURRENT EDITION OF THE "GUIDE FOR PLANT APPRAISAL" PUBLISHED BY INTERNATIONAL SOCIETY OF AGRICULTURE.

FOR THE CITY OF COLUMBUS - DEPARTMENT OF TECHNOLOGY

COC-DOT MAY HAVE OVERHEAD AND UNDERGROUND FIBER CABLES EXISTING AT THIS WORK SITE. ANY REQUIRED RELOCATION, SUPPORT, PROTECTION, OR ANY OTHER ACTIVITY CONCERNED WITH COC-DOT'S CABLES, CONDUITS, MANHOLES, HAND HOLES, PULL BOXES, PAD MOUNT CABINETS OR OTHER FACILITIES AND/OR MATERIALS IN THE CONSTRUCTION AREA IS TO BE PERFORMED BY THE CONTRACTOR UNDER THE DIRECTION OF COC-DOT PERSONAL AND AT THE EXPENSE OF THE PROJECT. THE CONTRACTOR SHALL USE MATERIALS AND MAKE REPAIRS TO A COC-DOT'S SYSTEM BY FOLLOWING THE COC-DOT MATERIAL AND INSTALLATION SPECIFICATIONS IN I-NET'S GENERAL SPECIFICATIONS DOCUMENT, HEREAFTER REFERRED TO SIMPLY AS THE "IGSD". ANY RE-INSTALLED FIBER SHALL REQUIRE TESTING AS REFERRED TO IN IGSD. THE CONTRACTOR SHALL BE CITY OF COLUMBUS APPROVED FOR FIBER SPLICING PLUS MEET IGSD REQUIREMENTS. IF ANY CABLE FACILITY BELONGING TO THE COC-DOT IS DAMAGED IN ANY MANNER BY THE CONTRACTOR, HIS AGENTS, SERVANTS OR EMPLOYEES, THAT WOULD REQUIRE EMERGENCY REPAIRS, THE COC-DOT MAINTENANCE CONTRACTOR SHALL MAKE ALL NECESSARY REPAIRS, AND THE EXPENSE OF SUCH REPAIRS AND OTHER RELATED COSTS SHALL BE PAID BY THE CONTRACTOR TO THE DIVISION OF TECHNOLOGY CITY OF COLUMBUS. NOTE: ANY WORK PERFORMED OR MATERIALS INSTALLED BY THE CONTRACTOR THAT HAS NOT BEEN APPROVED BY COC-DOT PERSONAL OR HAS BEEN CONSTRUCTED OUTSIDE OF THE REQUIREMENTS OF THE IGSD WILL BE REPLACED OR REBUILT AT THE CONTRACTORS EXPENSE. CONTACT (614) 645-7756 COC-DOT FIBER PHYSICAL PERSONAL FOR QUESTIONS.

ASBUILT CHANGES / REVISIONS

DATE	DESCRIPTIONS
–	–
–	–
–	–
–	–
–	–

OHIO Utilities Protection SERVICE
Call Before You Dig
1-800-362-2764
OR 8-1-1
CALL TWO WORKING DAYS BEFORE YOU DIG
(NON MEMBERS MUST BE CALLED DIRECTLY)

6040 COLLINGS DR.

DESIGNER: K. KHAY

everstream®
FASTER FIBER. BETTER BUSINESS.®

INFORMATION IN THIS DOCUMENT IS PROPRIETARY AND CONFIDENTIAL AND SHALL NOT BE USED, COPIED, REPRODUCED, OR DISCLOSED WITHOUT PRIOR WRITTEN CONSENT OF EVERSTREAM

PLANS PREPARED BY:
NEESAI CAD DESIGNS
Drawing Information: Facility locations are general in nature and are only intended for approximate location reference. Neesai CAD Deisgns will not be held liable for the accuracy and will not assume responsibility for any damages resulting from these drawings.

LEGEND

E/P	= EX. EDGE OF PAVEMENT	OHF	= PROP. OVERHEAD FIBER		PROPOSED ANCHOR & GUY		PROPOSED HANDHOLE
C/L	= EX. CENTER LINE	B	= PROP. BURIED FIBER		FOREIGN/EXISTING ANCHOR & GUY		EXISTING HANDHOLE
R/W	= EX. RIGHT OF WAY	P/L	= EX. PROPERTY LINE		AERIAL STORAGE LOOP		STORM DRAIN
					BURIED STORAGE LOOP		FIRE HYDRANT

SCALE: NONE

SHEET: 2 OF 22

CITY OF COLUMBUS
DEPARTMENT OF PUBLIC SERVICE

TEMPORARY TRAFFIC CONTROL (NOTES REQUIRED ON ALL PROJECTS)

1. ALL TEMPORARY TRAFFIC CONTROL (TTC) DEVICES SHALL BE FURNISHED, ERECTED, MAINTAINED AND REMOVED BY THE CONTRACTOR IN ACCORDANCE WITH THE OHIO MANUAL OF UNIFORM TRAFFIC CONTROL DEVICES FOR STREETS AND HIGHWAYS (CURRENT EDITION). COPIES ARE AVAILABLE FROM THE OHIO DEPARTMENT OF TRANSPORTATION, OFFICE OF CONTRACTS, 1980 WEST BROAD STREET, COLUMBUS, OHIO 43223. NOTE: ALL DEVICES SHALL COMPLY, FOR CONDITION AND LOCATION, WITH THE CURRENT EDITION OF THE NCHRP 350 AND MASH CRASH TESTING GUIDELINES.

2. CONSTRUCTION OPERATIONS SHALL NOT BEGIN UNTIL ALL TRAFFIC CONTROL IS IN PLACE AND APPROVED BY THE DEPARTMENT OF PUBLIC SERVICE INSPECTOR. IF THE CONTRACTOR DOES NOT COMPLY WITH THE STANDARDS, INCLUDING THE INSTALLATION OF TEMPORARY PAVEMENT MARKINGS AND THE REMOVAL OF CONFLICTING TRAFFIC CONTROLS, THEIR PERMIT SHALL BE REVOKED AND ALL WORK SHALL BE TERMINATED. TEMPORARY PAVEMENT MARKINGS TO INCLUDE, BUT NOT LIMITED TO, CHANNELIZING LINES, EDGE LINES, AND CENTERLINES SHALL BE INSTALLED AND MAINTAINED ON ALL CONSTRUCTION OPERATIONS LASTING A MINIMUM OF 14 CALENDAR DAYS OR AS DIRECTED BY THE TEMPORARY TRAFFIC CONTROL COORDINATOR OR THE PROJECT ENGINEER.

3. THE CONTRACTOR SHALL GIVE ADVANCE NOTIFICATION (WRITTEN AND VERBALLY) TO THE TEMPORARY TRAFFIC CONTROL COORDINATOR AT 614-645-0355 OR 614-645-5845 & THE DIVISION OF REFUSE COLLECTION'S OPERATION MANAGER AT 614-645-1675, WRITTEN NOTIFICATION TO PAVING THE WAY AT PAVINGTHEWAY@MORPC.ORG OR VERBAL TO 614-233-4200, PROJECT ENGINEER, AND THE SENIOR SERVICE PLANNER OF COTA AT 614-308-4373 OR FAX 614-275-5933, INFORMING THEM OF ALL UPCOMING MAINTENANCE OF TRAFFIC CHANGES ON A WEEKLY BASIS. NOTIFICATION SHALL INCLUDE, BUT NOT BE LIMITED TO, WHAT, WHERE, WHEN, AND HOW PEDESTRIAN AND VEHICULAR TRAFFIC WILL BE AFFECTED, AND THE TEMPORARY TRAFFIC CONTROL PROCEDURES THE CONTRACTOR IS PLANNING TO USE. THE TYPE OF TRAFFIC CHANGE SHALL DETERMINE THE LENGTH OF ADVANCE NOTIFICATION REQUIRED:

TYPE OF CHANGE	ADVANCE NOTIFICATION NEEDED
DETOURS/ROAD CLOSURES	30-DAY NOTIFICATION PRIOR TO CLOSURE
LANE CLOSURES LASTING 2 WEEKS OR MORE	2-WEEKS
LANE CLOSURES OF LESS THAN 2 WEEKS	3-DAYS
LANE CLOSURES OF 2 DAYS OR LESS	1-DAY

THE COTA SENIOR SERVICE PLANNER SHALL BE CONTACTED 30 DAYS PRIOR TO ANY PLANNED CLOSURE ON ASSIGNED COTA ROUTES. ANY OTHER UNFORESEEN IMPACTS TO TRAFFIC SHALL BE IMMEDIATELY REPORTED AS THEY OCCUR.

4. THE CONTRACTOR SHALL BE RESPONSIBLE FOR THE PROTECTION AND SAFE MOVEMENT OF PEDESTRIANS THROUGH, AROUND, OR DETOURED AWAY FROM THE CONSTRUCTION SITE. TRAFFIC CONTROL FOR PEDESTRIAN MOVEMENT SHALL BE AS PER CITY OF COLUMBUS CONSTRUCTION AND MATERIAL SPECIFICATIONS, CITY OF COLUMBUS STANDARD CONSTRUCTION DRAWINGS, AND FIGURES 6H-28 (TA-28) AND 6H-29 (TA-29) OF PART VI OF THE OHIO MANUAL OF UNIFORM TRAFFIC CONTROL DEVICES. WHEN NOT SHOWN ON A SIGNED PLAN, ALL SIDEWALK DIVERSIONS AND TEMPORARY MID-BLOCK CROSSINGS SHALL BE PREAPPROVED BY THE PROJECT ENGINEER OR THE TEMPORARY TRAFFIC CONTROL COORDINATOR. ACCESS FOR PEDESTRIAN AND VEHICULAR TRAFFIC TO ALL ADJOINING PROPERTIES SHALL BE MAINTAINED AT ALL TIMES.

5. **MAINTAINING TRAFFIC DURING HOLIDAYS AND SPECIAL EVENTS**
NO WORK SHALL BE PERFORMED AND ALL EXISTING LANES SHALL BE OPEN TO TRAFFIC DURING DESIGNATED HOLIDAYS OR SPECIAL EVENTS INCLUDING THE OHIO STATE FOOTBALL HOME GAME. THE PERIOD OF TIME THAT THE LANES ARE TO BE OPEN DEPENDS ON THE DAY OF THE WEEK ON WHICH THE HOLIDAY OR EVENT FALLS. CONTACT THE CITY OF COLUMBUS TEMPORARY TRAFFIC CONTROL COORDINATOR, 614-645-5845 OR CELL, 614-332-7472 FOR EVENT DATES, LOCATIONS, AND SCHEDULE. HOLIDAYS WILL CONSIST OF CHRISTMAS, NEW YEARS, FOURTH OF JULY-RED, WHITE AND BOOM FIREWORKS NIGHT (6:00AM-12MIDNIGHT), MEMORIAL DAY, LABOR DAY, AND THANKSGIVING. RED, WHITE AND BOOM, FIREWORKS CELEBRATION AND A MINIMUM OF ONE DAY PRIOR TO FIREWORKS NIGHT SHALL REQUIRE ALL TEMPORARY TRAFFIC CONTROL DEVICES TO BE REMOVED FROM THE PROJECT AREA AND PLACE EITHER IN A PRE-DETERMINED LOCATION APPROVED BY THE TEMPORARY TRAFFIC CONTROL COORDINATOR OR COMPLETELY REMOVED FROM THE SITE.

6. THE CONTRACTOR SHALL CONTACT THE CITY OF COLUMBUS TEMPORARY TRAFFIC CONTROL COORDINATOR FOR ANY ADDITIONAL MOT REQUIREMENTS FOR SPECIAL EVENTS, INCLUDING OSU FOOTBALL HOME GAMES.

7. THE CONTRACTOR SHALL MAINTAIN ALL PERMANENT TRAFFIC CONTROLS NOT IN CONFLICT WITH THE TEMPORARY TRAFFIC CONTROLS THROUGHOUT THIS PROJECT. PERMANENT TRAFFIC CONTROLS MAY BE TEMPORARILY RELOCATED OR COVERED, AS APPROVED BY THE ENGINEER. THE CONTRACTOR SHALL ASSUME ALL LIABILITY FOR MISSING, DAMAGED, OR IMPROPERLY PLACED SIGNS.

8. ANY WORK DONE BY THE DEPARTMENT OF PUBLIC SERVICE, INCLUDING INSTALLATION, RELOCATION, REMOVAL AND/OR REPLACEMENT OF TEMPORARY TRAFFIC CONTROL DEVICES AS A RESULT OF WORK DONE BY THE CONTRACTOR OR AS A RESULT OF NEGLIGENCE OF THE CONTRACTOR, SHALL BE AT THE CONTRACTORS' EXPENSE.

9. THE ROADWAY SHALL NOT BE OPENED TO NON-CONSTRUCTION TRAFFIC UNTIL THE CRITICAL PERMANENT TRAFFIC CONTROLS ARE IN PLACE, OR UNTIL TEMPORARY TRAFFIC CONTROLS APPROVED BY THE ENGINEER, ARE INSTALLED. THE CRITICAL PERMANENT TRAFFIC CONTROLS ARE STOP, YIELD, ONE - WAY, DO NOT ENTER, RESTRICTED TURN SIGNS AND ALL STREET NAME SIGNS. OTHER CRITICAL SIGNS MAY BE NOTED ON THE PLANS AS WELL. THE CONTRACTOR ASSUMES ALL LIABILITY FOR THE PREMATURE REMOVAL OF TEMPORARY TRAFFIC CONTROLS.

10. **ITEM 614 - MAINTAINING TRAFFIC**
ALL COSTS THAT CONSIST OF MAINTAINING AND PROTECTING VEHICULAR AND PEDESTRIAN TRAFFIC ACCORDING TO THE LATEST EDITION OF THE CITY OF COLUMBUS CONSTRUCTION AND MATERIAL SPECIFICATIONS, THE OHIO MANUAL OF UNIFORM TRAFFIC CONTROL DEVICES FOR STREETS AND HIGHWAYS (OMUTCD), AND PER THE REQUIREMENTS DESIGNATED IN THE PLAN INCLUDING ALL LAW ENFORCEMENT OFFICER (LEO) AND FLAGGER HOURS SHALL BE INCLUDED IN THE LUMP SUM ITEM 614.
IN ADDITION TO THE REQUIREMENTS HEREIN, AND THE LATEST EDITION OF THE OHIO MANUAL OF UNIFORM TRAFFIC CONTROL DEVICES, A UNIFORMED LAW ENFORCEMENT OFFICER (LEO) SHALL BE PROVIDED FOR CONTROLLING TRAFFIC UNDER THE FOLLOWING CONDITIONS:

- WORK WITHIN A SIGNALIZED INTERSECTION, DEFINED AS THE AREA BOUNDED BY THE REAR XWALK LINES
- WHEN FLAGGING WITHIN THE INTERSECTION OF TWO ARTERIAL ROADWAYS
- WHEN SPECIFIED IN THE MAINTENANCE OF TRAFFIC PLAN OR AS WHEN DIRECTED BY THE PROJECT ENGINEER
- WHEN SHIFTING TRAFFIC LEFT OF CENTER, THROUGH A SIGNALIZED INTERSECTION, WITHOUT SHIFTING SIGNAL HEADS

A FLAGGER SHALL BE UTILIZED TO ASSIST IN CONTROLLING TRAFFIC WHILE EQUIPMENT IS ENTERING OR EXITING AN INTERSECTION OR WORK ZONE. THE CONTRACTOR MAY UTILIZE HIS OWN FLAGGER OR LEO UNDER PAY ITEM 614 MAINTAINING TRAFFIC, LUMP SUM. FLAGGERS AND LEO'S SHALL BE EQUIPPED ACCORDING TO THE STANDARDS FOR FLAGGING TRAFFIC CONTAINED IN THE OMUTCD. FLAGGING OPERATIONS PERFORMED BY LEO'S OR DESIGNATED FLAGGERS SHALL ONLY BE PERMITTED AS LONG AS ALL TRAFFIC CONTROL IS IN PLACE ACCORDING TO FIGURE 6H-10 (TA-10) IN THE OHIO MANUAL. PATROL CARS SHALL NOT BE USED IN FLAGGING OPERATIONS.

IF THE CONTRACTOR WISHES TO UTILIZE LEO'S WITH OR WITHOUT PATROL CARS FOR TRAFFIC CONTROL OTHER THAN FOR THAT REQUIRED IN THE PLANS, THEY MAY DO SO AT THEIR OWN EXPENSE. THE CONTRACTOR SHALL MAKE ARRANGEMENT THROUGH THE COLUMBUS POLICE DIVISION AT 614-645-4795.

LEO'S SHALL BE CONSIDERED TO BE EMPLOYED BY THE CONTRACTOR AND THE CONTRACTOR SHALL BE RESPONSIBLE FOR THEIR ACTIONS. ALTHOUGH EMPLOYED BY THE CONTRACTOR, THE CITY REPRESENTATIVE SHALL HAVE CONTROL OVER THEIR PLACEMENT. LEO'S SHALL NOT HAVE THE AUTHORITY TO CHANGE, EDIT OR MODIFY ANY MAINTENANCE OF TRAFFIC SCHEME WITHOUT THE PERMISSION OF THE TEMPORARY TRAFFIC CONTROL COORDINATOR OR PROJECT ENGINEER UNLESS AN EMERGENCY DEVELOPS.

IF A SAFETY HAZARD DEVELOPS, A LEO MAY BE ASSIGNED BY THE COLUMBUS PUBLIC SAFETY AND/OR THE PUBLIC SERVICE DIRECTOR AT THE CONTRACTOR'S EXPENSE.

ITEM 614 - LAW ENFORCEMENT OFFICER (LEO) WITH PATROL CAR, AS PER PLAN
IN ADDITION TO LEO AND FLAGGER HOURS INCLUDED IN ITEM 614 MAINTAINING TRAFFIC, LUMP SUM; THE FOLLOWING QUANTITIES HAVE BEEN CARRIED TO THE GENERAL SUMMARY TO BE USED AS DIRECTED BY THE ENGINEER OR AN ACCEPTABLE REPRESENTATIVE FOR THE CITY OF COLUMBUS. THE OFFICIAL PATROL CAR WITH TOP MOUNTED EMERGENCY FLASHING LIGHTS SHALL BE A PUBLIC SAFETY VEHICLE AS REQUIRED BY THE OHIO REVISED CODE. THE CONTRACTOR SHALL BE PAID FOR THIS BID ITEM ONLY IF DIRECTED BY THE ENGINEER.

ITEM 614, LAW ENFORCEMENT OFFICER WITH PATROL CAR, AS PER PLAN - _____ HOURS

ITEM 614 - LAW ENFORCEMENT OFFICER (LEO) WITHOUT PATROL CAR, AS PER PLAN
IN ADDITION TO LEO AND FLAGGER HOURS INCLUDED IN ITEM 614 MAINTAINING TRAFFIC, LUMP SUM; THE FOLLOWING QUANTITIES HAVE BEEN CARRIED TO THE GENERAL SUMMARY TO BE USED AS DIRECTED BY THE ENGINEER OR AN ACCEPTABLE REPRESENTATIVE FOR THE CITY OF COLUMBUS. THE CONTRACTOR SHALL BE PAID FOR THIS BID ITEM ONLY IF DIRECTED BY THE ENGINEER.

ITEM 614, LAW ENFORCEMENT OFFICER WITHOUT PATROL CAR, AS PER PLAN - _____ HOURS

TEMPORARY TRAFFIC CONTROL (IF APPLICABLE, FOR USE ON A PER PROJECT BASIS)

1. PORTABLE CHANGEABLE MESSAGE SIGNS (PCMS) SHALL BE INSTALLED A MINIMUM OF 7 DAYS PRIOR TO CLOSURE OF A ROADWAY. THE MESSAGE SHALL ADVISE THE MOTORIST OF THE DATES, TIMES, AND DURATION OF THE CLOSURE. THE PCMS SHALL REMAIN IN PLACE FOR 7 DAYS AFTER THE START OF THE CLOSURE.

2. WHEN NOT INCLUDED IN A SIGNED PLAN, A TTC PLAN (TTCP) INCLUDING PEDESTRIAN CONTROL SHALL BE SUBMITTED TO THE TTC COORDINATOR AT 614-645-0355 OR 614-645-5845 AT THE PRE-CONSTRUCTION MEETING OR A MINIMUM OF TEN (10) WORKING DAYS PRIOR TO BEGINNING WORK FOR APPROVAL. COPIES OF THE APPROVED TTCP SHALL BE GIVEN TO THE PROJECT ENGINEER AND KEPT ON SITE ALONG WITH THE STREET CLOSURE/OCCUPANCY PERMIT.

3. TYPE C STEADY-BURN OR TYPE D 360-DEGREE STEADY-BURN WARNING LIGHTS SHALL BE REQUIRED ON ALL BARRICADES, DRUMS, AND SIMILAR TRAFFIC CONTROL DEVICES IN USE AT NIGHT GAMES ONLY 42" REFLECTORIZED CHANNELIZING DEVICES (CONES) SHALL BE PERMITTED FOR NIGHTTIME WORK WITH THE APPROVAL OF THE TTC COORDINATOR AT 614-645-0355 OR 614-645-5845 PER O.D.O.T. STANDARDS.

4. A FLASHING ARROW PANEL (48" X 96"-TYPE C) SHALL BE USED IN LANE CLOSURES AS PER THE OHIO MANUAL.

5. ALL TRENCHES WITHIN THE ROAD RIGHT OF WAY SHALL BE BACKFILLED OR SECURELY PLATED PER (CITY OF COLUMBUS GENERAL POLICY ON STEEL PLATE USAGE DATED 11/15/2006 AND STD. DWG. 1441, LATEST EDITION) DURING NON-WORKING HOURS.

6. ALL EXISTING TRAFFIC LANES SHALL BE FULLY OPEN TO TRAFFIC AT ALL TIMES ON:_____.

7. ALL TRAFFIC LANES SHALL BE FULLY OPEN TO TRAFFIC FROM 6:00 A.M. TO 9:00 A.M. AND 4:00 P.M. TO 6:00 P.M., OR 6:00 TO 9:00 A.M. AND 3:00 TO 6:00 P.M. IN THE COLUMBUS BUSINESS DISTRICT (CBD) PARKING AREA, MONDAY THROUGH FRIDAY ON _____. _____LANE(S) MAY BE CLOSED TO TRAFFIC DURING WORKING HOURS.

8. ONE-WAY _____ LANE(S) OF TRAFFIC SHALL BE MAINTAINED AT ALL TIMES ON:_____.

9. TWO-WAY, TWO-LANE (ONE-LANE EACH DIRECTION) TRAFFIC SHALL BE MAINTAINED AT ALL TIMES BY USE OF EXISTING, PROPOSED, OR TEMPORARY PAVEMENT PER CITY OF COLUMBUS MAINTENANCE OF TRAFFIC, STANDARD CONSTRUCTION DRAWING 1510 AND FIGURE 6H-32 TYPICAL APPLICATION 32 (TA-32) OF THE OHIO MANUAL OF UNIFORM TRAFFIC CONTROL DEVICES.

10. TWO-WAY, ONE-LANE TRAFFIC MAY BE MAINTAINED DURING CONSTRUCTION OPERATIONS ON _____, PER THE CITY OF COLUMBUS MAINTENANCE OF TRAFFIC, STANDARD CONSTRUCTION DRAWING 1550 AND FIGURE 6H-10 (TA-10) OF THE OHIO MANUAL OF UNIFORM TRAFFIC CONTROL DEVICES.

11. _____ MAY BE CLOSED BETWEEN _____ AND _____ FOR A MAXIMUM OF ____ HOUR(S)/DAY(S) BETWEEN THE HOURS OF ____ AND _____ PER THE CITY OF COLUMBUS MAINTENANCE OF TRAFFIC, STANDARD CONSTRUCTION DRAWING 1540 AND FIGURE 6H-20 (TA-20) OF THE OHIO MANUAL AND/OR APPROVED BY THE DEPARTMENT OF PUBLIC SERVICE. THE CONTRACTOR SHALL BE RESPONSIBLE FOR ALL COSTS IN PROVIDING DETOUR INCLUDING THE REMOVAL AND REINSTALLATION OF ANY CONFLICTING TRAFFIC CONTROL AND/OR ANY NECESSARY TRAFFIC SIGNAL WORK.

12. A TEMPORARY DIVERSION SHALL BE PROVIDED AND MAINTAINED IN GOOD CONDITION ON _____ DURING THE PERIOD OF WORK. ALL SUCH DIVERSIONS SHALL BE IN ACCORDANCE WITH THE OHIO MANUAL OF UNIFORM TRAFFIC CONTROL DEVICES.

13. THE DEPARTMENT OF PUBLIC SERVICE WILL REMOVE OR COVER ALL PARKING METER HEADS PUT OUT OF SERVICE BY THIS PROJECT. THERE IS A $60.00 DOLLAR CHARGE FOR THE REMOVAL AND REINSTALLATION OF EACH METER. IN ADDITION, A DAILY METER FEE WILL BE CHARGED FOR ALL ENFORCEMENT HOURS FOR EACH METER TAKEN OUT OF SERVICE. SEE THE PARKING METER OUT OF SERVICE FEES NOTE FOR MORE INFORMATION AND THE CALCULATION OF METERS TAKEN OUT OF SERVICE, PLUS THE METER POST AND CORE NOTE. THESE CHARGES WILL BE COLLECTED FROM THE CONTRACTOR IN ADVANCE WITH THE ISSUANCE OF THE STREET OCCUPANCY/EXCAVATION PERMIT FROM THE DEPARTMENT OF PUBLIC SERVICE'S PERMIT OFFICE (614-645-7497). PARKING SERVICES SHALL BE NOTIFIED A MINIMUM OF FORTY-EIGHT (48) HOURS (EXCLUDING SAT, SUN, & HOLIDAYS) PRIOR TO BEGINNING WORK. CALL 614-645-4072.

14. FOR MOBILE PAYMENT ONLY ZONES, PLEASE REVIEW THE POSTED MOBILE PAYMENT ZONE SIGN AND PROVIDE THE MOBILE PAYMENT ZONE NUMBER FOR THE PARKING SPACE(S) THAT WILL BE REMOVED FROM SERVICE. IF "TICK-MARKS" ARE INCLUDED WITHIN THE PARKING ZONE, THEN COUNT THE NUMBER OF SPACES NEEDED TO BE OUT OF SERVICE. IF NO "TICKMARKS" ARE WITHIN THE PARKING ZONE, THEN CALCULATE THE NUMBER OF "SPACES" NEEDED BY USING 20 FEET PER SPACE. ONCE ALL THE INFORMATION LISTED ABOVE HAS BEEN COLLECTED FOR THE PAID PARKING TO BE REMOVED FROM SERVICE, CONTACT THE CITY OF COLUMBUS, DIVISION OF PARKING SERVICES AT PARKINGSERVICES@COLUMBUS.GOV FOR ASSISTANCE WITH ESTIMATING THE DAILY PAID PARKING REVENUE RATE. PROVIDE THE PROJECT LOCATION IN THE SUBJECT LINE OF THE EMAIL. PLEASE NOTE, IN THE SPRING/SUMMER OF 2020, THE ONLINE METER MAP WILL ALSO INCLUDE THE HOURLY RATE FOR MOBILE PAYMENT ZONES. THIS COST IS TO BE INCLUDED IN THE BID FOR THIS PROJECT AS A PART OF ITEM 614 MAINTENANCE OF TRAFFIC, LUMP SUM. AT THE TIME THE CONTRACTOR SUBMITS FOR THE STREET OCCUPANCY/EXCAVATION PERMIT, ALONG WITH THE PAID PARKING IDENTIFICATION NUMBERS TO BE INCLUDED ON THE PERMIT REQUEST FORM, THE CONTRACTOR IS TO PROVIDE A LISTING OF THE METER IDENTIFICATION NUMBERS AND/OR MOBILE PAYMENT ONLY ZONE NUMBERS AND THE NUMBER OF DAYS THAT EACH PAID PARKING SPACE IS TO BE OUT OF SERVICE, TO THE DEPARTMENT OF PUBLIC SERVICE PERMIT OFFICE. THE PERMIT OFFICE WILL VERIFY THAT THE HOURLY RATES ARE CORRECT AND CALCULATE THE COST OF THE PERMIT.

15. TEMPORARY "EMERGENCY NO PARKING" SIGNS SHALL BE INSTALLED BY THE CONTRACTOR IN AREAS WITH NO PARKING METERS AND TO REMOVE PARKING FROM SERVICE IN AREAS WHERE PARKING METERS, KIOSKS, AND OR MOBILE PAYMENT ZONE(S) PARKING HAS BEEN TAKEN OUT OF SERVICE. THE SIGNS SHALL SHOW THE PERMIT NUMBER, INSTALLATION DATE, WORKING DATES, AND HOURS OF RESTRICTION ON EACH SIGN. SIGNS SHALL BE POSTED AT 50' C/C MINIMUM BY USE OF ANY OF THE FOLLOWING ITEMS: EXISTING SIGN POSTS, EXISTING UTILITY POLES, DRUMS AND/OR 42" CONES and REMOVED BY THE CONTRACTOR IN AREAS WITH NO PARKING METERS. THE TEMPORARY SIGN(S) SHALL HAVE THE INSTALLATION DATE, WORKING DATES, AND HOURS OF RESTRICTION SHOWN ON EACH SIGN. THESE SIGNS MAY BE OBTAINED FROM THE DEPARTMENT OF PUBLIC SERVICE'S PERMIT OFFICE. THE POLICE DIVISION REQUIRES THE "EMERGENCY NO PARKING" SIGNS BE POSTED A MINIMUM OF SEVENTY-TWO (72) HOURS PRIOR TO ANY VEHICLES BEING TOWED. WITHIN TWENTY-FOUR (24) HOURS OF POSTING, THE CONTRACTOR SHALL SUPPLY THE DEPARTMENT OF PUBLIC SERVICE WITH A WRITTEN RECORD OF POSTED LOCATIONS (FAX: 614-645-3298).

16. THE CONTRACTOR SHALL CONTACT OHIO UTILITY PROTECTION SERVICE (OUPS), NOW "OHIO 811", TO LOCATE AND MARK ALL UNDERGROUND TRAFFIC CONTROL CABLES PRIOR TO THE BEGINNING OF ANY WORK WITHIN 450 FEET OF ANY SIGNALIZED INTERSECTION(S) OR WITHIN ANY POSTED AREA WHERE THE DEPARTMENT HAS UNDERGROUND CABLE. THE SIGNAL OPERATION ENGINEER 614-645-6418 SHALL BE NOTIFIED SIX (6) WEEKS IN ADVANCE FOR SIGNAL REVISIONS OR POLE RELOCATIONS.

17. THE CONTRACTOR SHALL CONTACT THE DIVISION OF REFUSE COLLECTION, OPERATIONS MANAGER MICHAEL PICKARD, 614-645-1675.

18. NO EXCAVATION SHALL BE MADE WITHIN FIVE (5) FEET OF ANY FOUNDATION THAT SUPPORTS SIGNAL POLES, TRAFFIC SIGNAL DISPLAYS OR SIGNS BY MAST ARM OR SIGNAL SPAN. EXCAVATION WITHIN EIGHT (8) FEET, BUT MORE THAN FIVE (5) FEET SHALL REQUIRE ADDITIONAL SUPPORT (DOWN GUY, HEAD GUY, BASE GUY, ETC.). THE CONTRACTOR SHALL CONTACT SIGNAL OPERATION PERSONNEL AT 614-645-0423 (CELL 614-419-4501) AT LEAST FORTY-EIGHT (48) HOURS (EXCLUDING SAT. & SUN.) PRIOR TO THE BEGINNING OF SUCH EXCAVATION SO THAT THE CITY CAN APPROVE THE STABILIZATION SETUP BY THE CONTRACTOR. IF UNABLE TO MAKE CONTACT THROUGH ABOVE NUMBERS, CALL 614-645-7393. STABILIZATION WILL BE DONE BY THE CONTRACTOR AT THE OWNERS'/CONTRACTING AGENCY'S EXPENSE.

19. SIGNAL CONDUIT CLEARANCE 3' HORIZONTAL AND 1' VERTICAL FROM ADJACENT UTILITIES SHALL BE MAINTAINED AT ALL TIMES.

20. WHEN ANY TRAFFIC CONTROL DEVICE, CONDUIT, OR CABLE IS DAMAGED, THE CONTRACTOR SHALL NOTIFY SIGNAL OPERATION PERSONNEL AT 614-645-0423 (CELL 614-419-4501) BETWEEN 7:00 AM AND 4:00 PM, MONDAY THROUGH FRIDAY. IF UNABLE TO MAKE CONTACT THROUGH THE OTHER NUMBERS, CALL 614-645-7393.

21. THE ROADWAY OR ANY SECTION OF ROADWAY SHALL NOT BE OPENED TO NON-CONSTRUCTION TRAFFIC UNTIL ALL TEMPORARY, NON-REFLECTIVE, BLACKOUT TAPE HAS BEEN COMPLETELY REMOVED FROM NON-CONFLICTING PERMANENT PAVEMENT MARKINGS FOR THAT AREA OF THE ROADWAY, OR UNLESS OTHERWISE DIRECTED IN WRITING BY THE ENGINEER. THIS IS SUPPLEMENTAL TO CITY OF COLUMBUS, CMS-614.11- G, AND SHALL BE PAID FOR THROUGH THE 614-LUMP SUM.

22. WHENEVER YELLOW CENTERLINES OR TURN-LANE LINES ARE PAVED OVER, REMOVED, OR OTHERWISE UNSERVICEABLE, THE CONTRACTOR SHALL INSTALL CLASS II TEMPORARY STRIPING
(MINIMUM 4' LONG SEGMENTS). TEMPORARY PAINT SHALL BE USED ON ALL MILLED
SURFACES. TEMPORARY TAPE SHALL BE USED ON ALL FINAL COURSES OF ASPHALT. PAINT OR
TAPE MAY BE USED ON INTERMEDIATE COURSES OF ASPHALT. IF APPROVED BY THE ENGINEER, DRUMS WITH STEADY BURNING TYPE C OR TYPE D 360 DEGREE WARNING LIGHTS AND "KEEP RIGHT" SIGNS MAY BE SUBSTITUTED FOR CENTERLINE MARKINGS.

23. CLASS II TEMPORARY STRIPING (MINIMUM 4' LONG SEGMENTS) SHALL BE AS PER ITEM 614 - WORK ZONE PAVEMENT MARKING AND SHALL BE PLACED WITHIN ONE (1) FOOT
LONGITUDINAL TOLERANCE OF THE PERMANENT STRIPE(S). ALL TEMPORARY STRIPING NOT TO
WITHIN ONE (1) FOOT TOLERANCE SHALL BE REMOVED AND REPLACED IN THE PROPER LOCATION BY THE CONTRACTOR. CLASS II TEMPORARY STRIPING SHALL BE OF THE APPROPRIATE COLOR AND SPACED A MAXIMUM OF FORTY (40) FEET CENTER TO CENTER.

EXISTING PERMANENT TRAFFIC CONTROL (NOTES REQUIRED ON ALL PROJECTS)

1. ANY WORK DONE BY THE DEPARTMENT OF PUBLIC SERVICE, INCLUDING INSTALLATION, RELOCATION, REMOVAL AND/OR REPLACEMENT OF PERMANENT TRAFFIC CONTROL DEVICES AS A RESULT OF WORK DONE BY THE CONTRACTOR OR AS A RESULT OF NEGLIGENCE OF THE CONTRACTOR, SHALL BE AT THE CONTRACTORS' EXPENSE.

2. THE CONTRACTOR SHALL BE RESPONSIBLE FOR REINSTALLATION AND/OR REPLACEMENT OF ALL PERMANENT TRAFFIC CONTROL DEVICES DAMAGED OR REMOVED DURING CONSTRUCTION. PERMANENT TRAFFIC CONTROL NO LONGER IN CONFLICT WITH TEMPORARY TRAFFIC CONTROL SHALL BE REPLACED IMMEDIATELY.

3. THE CONTRACTOR SHALL REPLACE ALL PAVEMENT MARKINGS, INCLUDING RAISED PAVEMENT MARKERS (RPM) SHOWN IN CONFLICT, REMOVED DUE TO CONSTRUCTION OR MAINTENANCE OF TRAFFIC SET UP, DESTROYED, OR RENDERED UNSERVICEABLE BY THE PROJECT ENGINEER OR THE PUBLIC SERVICE PAVEMENT MARKING MANAGER. ALL PAVEMENT MARKING MATERIALS SHALL BE REPLACED IN-LIKE KIND IF NOT SHOWN IN THE PLAN OR PERMIT INCLUDING RAISED PAVEMENT MARKERS. ALL PAVEMENT MARKINGS SHALL BE REPLACED IN FULL. NO PARTIAL LENGTH OR SECTIONS OF PAVEMENT MARKINGS SHALL BE REPLACED WITHOUT REMOVING THE ENTIRE MARKING BY USE OF THE WATER BLAST METHOD. REMOVAL BY ABRASIVE WHEEL GRINDING SHALL ONLY BE APPROVED BY THE PUBLIC SERVICE PAVEMENT MARKING MANAGER.

ASBUILT CHANGES / REVISIONS

DATE	DESCRIPTIONS
—	—
—	—
—	—
—	—
—	—

OHIO Utilities Protection SERVICE
Call Before You Dig
1-800-362-2764
OR 8-1-1
CALL TWO WORKING DAYS BEFORE YOU DIG
(NON MEMBERS MUST BE CALLED DIRECTLY)

6040 COLLINGS DR.

DESIGNER: K. KHAY

everstream®
FASTER FIBER. BETTER BUSINESS.®

INFORMATION IN THIS DOCUMENT IS PROPRIETARY AND CONFIDENTIAL AND SHALL NOT BE USED, COPIED, REPRODUCED, OR DISCLOSED WITHOUT PRIOR WRITTEN CONSENT OF EVERSTREAM

PLANS PREPARED BY:
NEESAI CAD DESIGNS
Drawing Information: Facility locations are general in nature and are only intended for approximate location reference. Neesai CAD Designs will not be held liable for the accuracy and will not assume responsibility for any damages resulting from these drawings.

LEGEND

E/P = EX. EDGE OF PAVEMENT		OHF = PROP. OVERHEAD FIBER	
C/L = EX. CENTER LINE		B = PROP. BURIED FIBER	
R/W = EX. RIGHT OF WAY		P/L = EX. PROPERTY LINE	

PROPOSED ANCHOR & GUY	PROPOSED HANDHOLE
FOREIGN/EXISTING ANCHOR & GUY	EXISTING HANDHOLE
AERIAL STORAGE LOOP	STORM DRAIN
BURIED STORAGE LOOP	FIRE HYDRANT

SCALE: NONE

SHEET: 3 OF 22

EXISTING PERMANENT TRAFFIC CONTROL (IF APPLICABLE, FOR USE ON A PER PROJECT BASIS)

1. ALL OVERHEAD CABLE, AND DOWN GUYS OR BACK GUYS SHALL NOT BLOCK ANY PORTION OF A TRAFFIC SIGNAL, TRAFFIC CONTROL SIGN, OR OTHER TRAFFIC CONTROL DEVICE SUCH THAT VISIBILITY OR OPERATION OF THE TRAFFIC CONTROL DEVICE IS IMPAIRED.

2. ALL PERMANENT PAVEMENT MARKINGS AND TRAFFIC CONTROL SIGNS AS SHOWN ON THIS PLAN SHALL BE INSTALLED BY THE CONTRACTOR AT THE PROJECTS EXPENSE. THE PROJECT ENGINEER SHALL BE NOTIFIED TO DIRECT APPROPRIATE PERSONNEL A MINIMUM OF FORTY-EIGHT (48) HOURS (EXCLUDING SAT. & SUN.) PRIOR TO THE INSTALLATION OF PERMANENT MARKINGS TO INSPECT AND APPROVE THE PAVEMENT MARKING LAYOUT PRIOR TO PLACING THE PERMANENT MARKINGS.

3. PERMANENT STRIPING OR CLASS I TEMPORARY STRIPING SHALL BE INSTALLED NO LATER THAN FOURTEEN (14) CALENDAR DAYS AFTER THE FINAL PAVING COURSE IS COMPLETED. THE PAVING CONTRACTOR SHALL BE RESPONSIBLE TO NOTIFY THE STRIPING CONTRACTOR TO INSURE THE PERMANENT STRIPING IS INSTALLED WITHIN THE FOURTEEN (14) CALENDAR DAY LIMIT.

4. IF THE DEPARTMENT OF PUBLIC SERVICE IS TO INSTALL PERMANENT STRIPING, THE PROJECT ENGINEER SHALL BE NOTIFIED TO DIRECT APPROPRIATE PERSONNEL A MINIMUM OF TEN (10) WORKING DAYS PRIOR TO THE APPLICATION OF THE FINAL COURSE OF PAVEMENT.

5. **AT ANY LOCATION WHERE THE CONTRACTOR DAMAGES DETECTORS AND/OR THEIR LEAD-IN CABLES THE CONTRACTOR SHALL REPLACE THEM. AT ANY LOCATION WHERE DETECTION IS CHANGED FROM MAG PROBE UNITS TO LOOPS, THE CONTRACTOR SHALL REPLACE THE PROBE LEAD-IN WITH LOOP LEAD-IN CABLE. ALL REPAIRS TO DETECTION SHALL BE COMPLETED WITHIN 21 DAYS FROM DAMAGE TO DETECTION ON A PER INTERSECTION BASIS. IF THE 21DAY REPAIR REQUIREMENT CANNOT BE SATISFIED AT ANY LOCATION WHERE THE CONTRACTOR DAMAGES DETECTORS AND/OR THEIR LEAD-IN CABLES, THE CONTRACTOR, AT THE DISCRETION OF SIGNAL OPERATIONS PERSONNEL, MAY BE REQUIRED TO INSTALL A VERSICAM FLEX CAMERA SYSTEM, A WAVETRONIX RADAR SYSTEM, OR TEMPORARY LOOP DETECTION. ANY CONTRACTOR FAILING TO COMPLY WITH THESE GUIDELINES SHALL BE SUBJECT TO PENALTY TO THE SUM OF $100.00 PER DAY FOR EACH DAY BEYOND THE 21 DAY REPAIR PERIOD ON A PER INTERSECTION BASIS, UNTIL CONDITIONS ARE MET TO THE SATISFACTION OF THE SIGNAL OPERATIONS PERSONNEL. THIS PENALTY DEDUCTION SHALL BE SPECIFIC FOR EACH SIGNALIZED INTERSECTION EFFECTED BY THIS PROJECT AND SEPARATE FROM ANY LIQUIDATED DAMAGES FOR THE PROJECT AS A WHOLE. THE WORK TO INSTALL THE DETECTION SHALL CONFORM TO THE CITY OF COLUMBUS STANDARD DRAWING 4300 AND THE CITY OF COLUMBUS CONSTRUCTION AND MATERIAL SPECIFICATIONS, LATEST EDITION, WITH THE FOLLOWING PROVISIONS:**

   a) **THE CONTRACTOR SHALL PROVIDE THE DEPARTMENT OF PUBLIC SERVICE'S INSPECTOR, PRIOR TO THE COMMENCEMENT OF WORK, THE IMSA (INTERNATIONAL MUNICIPAL SIGNAL ASSOCIATION CERTIFICATION PAPERS FOR ALL SIGNAL TECHNICIANS WORKING ON THIS PROJECT.**

   b) **LOCATIONS OF THE REPLACEMENT DETECTION SHALL BE FIELD MARKED OR DIMENSIONED DRAWINGS SHALL BE SUBMITTED TO THE CONSTRUCTION SECTION BY DEPARTMENT OF PUBLIC SERVICE PERSONNEL. LOCATION OF FINAL PAVEMENT MARKINGS OR THE MARKINGS THEMSELVES SHALL BE CLEARLY INDICATED ON THE ASPHALT PRIOR TO DETECTOR LOCATIONS BEING MARKED. THE CONTRACTOR SHALL LAYOUT THE LOOPS ON THE PAVEMENT IF DRAWINGS ARE SUBMITTED. IF DRAWINGS HAVE NOT BEEN PROVIDED, CONTACT SIGNAL OPERATIONS PERSONNEL AT 614-645-0423 (CELL 614-419-4501) AT LEAST TWO WORKING DAYS PRIOR TO NEEDING THE LOCATION MARKED. IF UNABLE TO MAKE CONTACT THROUGH THE ABOVE NUMBERS, CALL 614-645-7393.**

   c) **THE SAW SLOT DEPTH FOR LOOP WIRE INSTALLATION SHALL BE FOUR (4) INCHES WITH SIX (6) INCHES AT THE CONDUIT ENTRANCE. IF ADVERSE PAVEMENT CONDITIONS WARRANT, DEPTH MAY BE INCREASED TO SIX (6) INCHES THROUGHOUT AND SHALL BE DETERMINED BY THE DEPARTMENT OF PUBLIC SERVICE INSPECTOR.**

   d) **EACH LOOP SHALL HAVE ITS OWN CONDUIT FROM EDGE OF PAVEMENT TO PULL BOX UNLESS SPECIFIED OTHERWISE BY THE DEPARTMENT OF PUBLIC SERVICE INSPECTOR.**

   e) **THE PULLBOX ASSEMBLY SHALL BE RATED AS MEDIUM TO HEAVY DUTY, TO BE INSTALLED IN CONCRETE WALKWAYS, AND SHALL HAVE ALL STAINLESS STEEL HARDWARE. THE PULLBOX COVER SHALL HAVE THE WORD "TRAFFIC" ON IT. THE COVER SHALL BE BOLTED TO THE BOX AND SHALL BE POLYMER CONCRETE. THE COVER PLUS HOUSING AS A UNIT SHALL BE RATED TO WITHSTAND A MINIMUM 20,000 LB. STATIC LOAD OVER A 10"X10" AREA AS PER ASTM C-857. THE BOX DEPTH SHALL BE 15 INCHES MINIMUM TO 30 INCHES MAXIMUM. IF THE PROJECT DOES NOT SPECIFY 725.06 POLYMER CONCRETE PULL BOXES, THE SUPPLIED ASSEMBLIES SHALL BE AS FOLLOWS: CDR SYSTEMS MODEL SA32-1015-18, OR SYNERTECH MODEL S1118B18FA. SIX (6) INCHES OF #57 AGGREGATE SHALL BE PLACED AT THE BOTTOM OF THE PULLBOX. NO CONDUIT SHALL PROTRUDE MORE THAN THREE (3) INCHES INSIDE THE PULLBOX. CONDUIT ELLS OR EXTENSIONS MAY BE USED TO ALIGN THE CONDUIT WITH THE HOUSING. THE COST FOR EXTENSIONS OR ELLS IF NEEDED SHALL BE INCIDENTAL TO THE PER UNIT PRICE.**

   f) **WHEN A PULLBOX IS NOT USED, THE SOLDERED SPLICE SHALL BE MADE IN AN ANCHOR BASE STRAIN POLE OR A CONDUIT RISER SPECIFIED BY THE DEPARTMENT OF PUBLIC SERVICE'S REPRESENTATIVE, EXCEPT WHERE A CONTROLLER CABINET IS MOUNTED ON THAT POLE IN WHICH CASE THE LOOP WIRE SHALL BE ROUTED DIRECTLY INTO THE CABINET.**

   g) **THE CONTRACTOR SHALL NOT MAKE ANY WIRING CONNECTIONS OR ADJUSTMENTS INSIDE THE CONTROL CABINET. WHEN SUCH CONNECTIONS ARE REQUIRED, THE CONTRACTOR SHALL NOTIFY THE TRAFFIC OPERATIONS SHOP 614-645-7393, MON.- FRI., 8 AM TO 4 PM, TO SCHEDULE CITY FORCES FOR MAKING THE ACTUAL CONNECTIONS. THE CONTRACTOR SHALL BE AVAILABLE AT THE AGREED TIME. THE CONTRACTOR WILL BE BILLED FOR ANY TIME THAT CITY FORCES ARE REQUIRED TO WAIT FOR THE CONTRACTORS' WORK TO BE COMPLETED.**

   h) **CONDUIT PLACED IN "RIGHT OF WAY" AREAS BEARING NO TRAFFIC FOR DETECTOR LEAD IN SHALL BE ITEM 725.051, CITY OF COLUMBUS CONSTRUCTION AND MATERIAL SPECIFICATIONS, LATEST EDITION. CONDUIT PLACED UNDER A ROADWAY OR IN AREAS THAT MAY BEAR TRAFFIC SHALL BE CONCRETE ENCASED (SIZES AND TYPE TO BE DETERMINED BY THE DEPARTMENT OF PUBLIC SERVICE'S REPRESENTATIVE. ALL CONDUITS SHALL BE PLACED AT A MINIMUM DEPTH OF 24".**

   i) **LOOP WIRE SHALL BE IDENTIFIED WITH A PLASTIC TAG (WBLT, EBRT, ETC.) AT THE SPLICE POINT OR AT ENTRANCE TO THE CABINET IF LEAD-IN CABLE IS NOT USED.**

   j) **THE ITEMS AND ESTIMATED QUANTITIES FOR THE REPLACEMENT OF THE DEPARTMENT OF PUBLIC SERVICE'S DETECTION ITEMS SHALL BE INCLUDED IN THESE PLANS WHEN DIRECTED BY THE PLAN REVIEWER. THESE ESTIMATES ARE FOR THE PURPOSE OF BIDDING THE PROJECT. THE FOLLOWING IS A LIST OF THE ITEMS AND QUANTITIES PROJECTED FOR USE IN DETECTOR REPLACEMENT FOR THIS PROJECT:**

ITEM	QUANTITY	UNIT	ITEM DESCRIPTION
202		SF	WALK REMOVED
608		SF	4" CONCRETE WALK
632		LF	CONDUIT RISER, 1 OR 2 INCH DIAMETER
625		LF	CONDUIT 1, 1 1/2, OR 2 INCH (AS PER PLAN)
625		LF	TRENCH
625		EACH	PULLBOX
632		EACH	DETECTOR LOOP
632		LF	LOOP DETECTOR LEAD-IN CABLE
632		LF	LASH / UNLASHED CABLE

THE CONTRACTOR SHALL NOTIFY SIGNAL OPERATION PERSONNEL AT 614-645-0423 (CELL 614-419-4501) AFTER ALL LOOPS HAVE BEEN INSTALLED AT EACH INTERSECTION. IF UNABLE TO MAKE CONTACT THROUGH THE ABOVE NUMBER, CALL 614-645-7393. THE DEPARTMENT OF PUBLIC SERVICE SHALL INSPECT ALL SENSORS AND TEST AS NECESSARY. THE CONTRACTOR SHALL REPLACE ALL LOOPS NOT MEETING SPECIFICATIONS.

MOT PERMIT NOTES

1. PERMIT MOT / TTC - SUBMITTAL

a.STANDARD DRAWINGS - ONLY COLUMBUS 1500-1550 WILL BE ACCEPTED FOR USE MOT / TTC ON PERMITS.

b.SITE SPECIFIC
REQUIRED - WHEN WORK ZONE IMPACTS A SIGNALIZED INTERSECTION.
REQUIRED - WHEN WORK AREA IN THE CENTRAL BUSINESS DISTRICT.
REQUIRED - WHEN REQUESTED BY MOT PERMIT REVIEW.
REQUIRED - LAW ENFORCEMENT OFFICER (LEO) AT SIGNALIZED INTERSECTIONS.

2. MASS TRANSIT AND RIDE SHARE

a.COTA BUS STOPS
SHALL CONTACT PRIOR TO START - PAUL EVANS - COTA SERVICE PROGRAM MANAGER (614) 308-4373 evanspm1@cota.com.
THIRTY DAYS - ANY CLOSURE WHICH CREATES DELAY OR DETOUR ON ASSIGNED ROUTES REQUIRES A TEMPORARY RELOCATION.
24 HOURS - PRIOR TO START OF CONSTRUCTION WITHIN 300' OF COTA ASSETS IN THE RIGHT OF WAY.
IMMEDIATELY - IN EVENT OF UNPLANNED WORK AFFECTING COTA BUS STOPS.

b.COTA ASSETS
SHALL CONTACT PRIOR TO START - PAUL EVANS - COTA SERVICE PROGRAM MANAGER (614) 308-4373 evanspm1@cota.com.
SHALL KEEP OPEN ALL STOPS & STATIONS IN WORK ZONE IF RELOCATION IS NOT REQUIRED BY COTA PROGRAM SERVICES MANAGER.

c.COGO - RIDE SHARE BIKE CHARGING STATIONS
SHALL CONTACT PRIOR TO START - CHET RIDENOUR - COGO BIKE SHARE OPERATIONS MANAGER (614) 506-8100 cridenour@lyft.com.
THIRTY DAYS - IF CLOSURE IMPACTS COGO BIKE STATION, LIMITS PUBLIC ACCESS DURING CONSTRUCTION.
24 HOURS - PRIOR TO START OF CONSTRUCTION WITHIN 300' OF COGO ASSETS.
IMMEDIATELY - IN EVENT OF UNPLANNED WORK AFFECTING COGO/LIFT ASSETS

3. BIKES AND PEDESTRIANS

a.BIKE LANE CLOSURE
WHEN A BIKE LANE PAVEMENT MARKING EXIST AND MUST BE INCLUDED IN THE MOT / TTC PLAN.
REFERENCE - MOT SHEET 1500 ADVANCE WARNING SIGNS WHEN CLOSING THE BIKE LANE AND MERGING BIKES.
REFERENCE - MOT SHEET 1500 TABLE 4 ADVANCE WARNING SIGN SPACING.
REQUIRED - ONE (1) SHARE THE ROAD SIGN MID-TAPER WHEN NO BIKE LANE BUT SHARROWS ONLY EXIST.

b.SIDEWALKS / CROSSWALKS
THE CONTRACTOR:
SHALL NOT CLOSE OPPOSING SIDEWALKS OR CROSSWALKS SIMULTANEOUSLY.
SHALL KEEP SIDEWALKS & CROSSWALKS BEYOND THE ACTIVE WORK AREA OPEN AT ALL TIMES.
SHALL PLACE R9-9 SIGNS EACH END OF THE ACTIVE WORK AREA.
SHALL PLACE R9-11 SIGNS AT THE NEAREST ADA CROSSWALKS BEYOND THE ACTIVE WORK AREA.
Note: "Sidewalks" defined ANY area within the right of way used by pedestrians.

4. PARKING

a.DRIVEWAYS
THE CONTRACTOR:
SHALL PROVIDE 72 HOURS ADVANCE NOTICE WHEN CLOSING DRIVEWAYS.
SHALL RESTORE ACCESS FOLLOWING END OF WORK THAT DAY AND MAINTAIN AREA IN COMPLIANCE WITH ADA REQUIREMENTS.
SHALL MONITOR OBSTRUCTED DRIVEWAYS AND RESPONSIBLE TO MAINTAIN ACCESS AS NEEDED.

b.ON STREET
THE CONTRACTOR:
SHALL CONTACT PARKING ENFORCEMENT (614) 645-4072 48 HOURS IN ADVANCE WHEN CLOSING METERED/APP PAY PARKING.
SHALL LIMIT PARKING RESTRICTIONS TO "AS NEEDED" TO SAFELY COMPLETE THE WORK.
SHALL PROVIDE 72 HOURS ADVANCE NOTICE TO RESIDENTS WHEN TEMPORARILY CLOSING ON STREET PARKING AREAS.
SHALL RESTORE ACCESS FOLLOWING END OF EACH WORK DAY.
SHALL MAINTAIN LANE WIDTH SUFFICIENT FOR VEHICLES TO SAFELY PASS THROUGH WORK AREA.
SHALL MONITOR AND ASSIST PERMITTED HANDICAP PARKING SPACES AS DEFINED BY THE ADA.

5. ADVANCE WARNING SIGNS

a.SIGNS, SIZES, SPACING, DISTANCE
THE CONTRACTOR:
SHALL PLACE SIGNS ON INTERSECTING STREETS WHEN NO ADVANCED WARNING SIGN IS SEEN PRIOR TO ENTERING THE WORK AREA.
b.SIZES < 40 MPH "LOW SPEED" AND 36" x 36 SHOULD BE USED.
c.SIZES > 45 MPH "HIGH SPEED" AND 48" x 48" SHOULD BE USED.
d.SPACING PER MOT SHEET 1500 TABLE 2.
e.DISTANCE VARIES WHEN TURN ONLY LANES EXIST. THE SPACE FROM STOP BAR TO TURN LANE PAVEMENT MARKINGS ORIGIN, CONTINUE PER TABLE 2.

6. TMC - SIGNAL TIMING, CAMERA MONITORING AND RECORDING

a.CITY OF COLUMBUS TMC - TRAFFIC MANAGEMENT CENTER (614) 645-7249
b.SIGNALS - TIMING CHANGES MAY BE REQUESTED BY SPECIAL DUTY LAW ENFORCEMENT OFFICER (LEO).
c.CAMERAS - MONITORING AND RECORDING MUST BE ARRANGED 72 HOURS IN ADVANCE.

7. SHOULDERS

a.DEFINITIONS: Edge of Pavement (EOP), Back of Curb (BOC), Face of Curb (FOC), Solid White Line (SWL), Lane of Travel (LOT)
THE CONTRACTOR:
SHALL NOT OCCUPY, BLOCK OR IMPEDE A LANE OF TRAVEL (LOT) WHILE USING A SHOULDER CLOSURE PER 6H-3 MODIFIED
SHALL PERFORM WORK BEYOND THE EDGE OF PAVEMENT (EOP), SOLID WHITE LINE (SWL), LANE OF TRAVEL (LOT), OR BACK OF CURB (BOC).
SHALL MAINTAIN A BUFFER, SAFE DISTANCE FROM THE SWL FOR TRAFFIC CONTROL DEVICE PLACEMENT ON EOP, SWL OR LOT.
SHALL PLACE R9-9 & R9-11 SIGNS FOR SIDEWALK CLOSURE & PEDESTRIAN DETOURS PER TYPICAL 6H29 FOR PEDESTRIAN SAFETY.
SHALL SECURE PERMISSION IN ADVANCE TO PARK, STORE, STAGE & SITE ACCESS

b.NOTES
Work Zone - Equipment, Staging & Storage is prohibited within 2' of the EOP, SWL, and LOT.
Traffic Conditions - Must remain normal when deploying shoulder closures.
Separation - A 2' Buffer between the work zone and lane of travel must be maintained.
Compliance - If not in compliance with the above MOT Approval is REVOKED. Cease and Contact the MOT Supervisor immediately (614) 645-0355.

8. EASEMENTS

a.EASEMENT ACCESS WITHIN PUBLIC RIGHT OF WAY
THE CONTRACTOR:
SHALL DEPLOY TRAFFIC CONTROL WHEN STAGING, STORAGE AND ACCESSING EASEMENTS.
SHALL DEPLOY PEDESTRIAN SAFETY MEASURES.

b.NOTES - Typical 1550.1 Traffic Control Plan when Accessing Easements Follow the Guidance Above

ASBUILT CHANGES / REVISIONS

DATE	DESCRIPTIONS
—	—
—	—
—	—
—	—
—	—

OHIO Utilities Protection SERVICE
Call Before You Dig
1-800-362-2764
OR 8-1-1
CALL TWO WORKING DAYS BEFORE YOU DIG
(NON MEMBERS MUST BE CALLED DIRECTLY)

6040 COLLINGS DR.

DESIGNER: K. KHAY

everstream®
FASTER FIBER. BETTER BUSINESS.®

INFORMATION IN THIS DOCUMENT IS PROPRIETARY AND CONFIDENTIAL AND SHALL NOT BE USED, COPIED, REPRODUCED, OR DISCLOSED WITHOUT PRIOR WRITTEN CONSENT OF EVERSTREAM

PLANS PREPARED BY:
NEESAI CAD DESIGNS
Drawing Information: Facility locations are general in nature and are only intended for approximate location reference. Neesai CAD Deisgns will not be held liable for the accuracy and will not assume responsibility for any damages resulting from these drawings.

LEGEND

E/P	= EX. EDGE OF PAVEMENT	OHF	= PROP. OVERHEAD FIBER		PROPOSED ANCHOR & GUY		PROPOSED HANDHOLE
C/L	= EX. CENTER LINE	B	= PROP. BURIED FIBER		FOREIGN/EXISTING ANCHOR & GUY		EXISTING HANDHOLE
R/W	= EX. RIGHT OF WAY	P/L	= EX. PROPERTY LINE		AERIAL STORAGE LOOP		STORM DRAIN
					BURIED STORAGE LOOP		FIRE HYDRANT

SCALE: NONE

SHEET: 4 OF 22

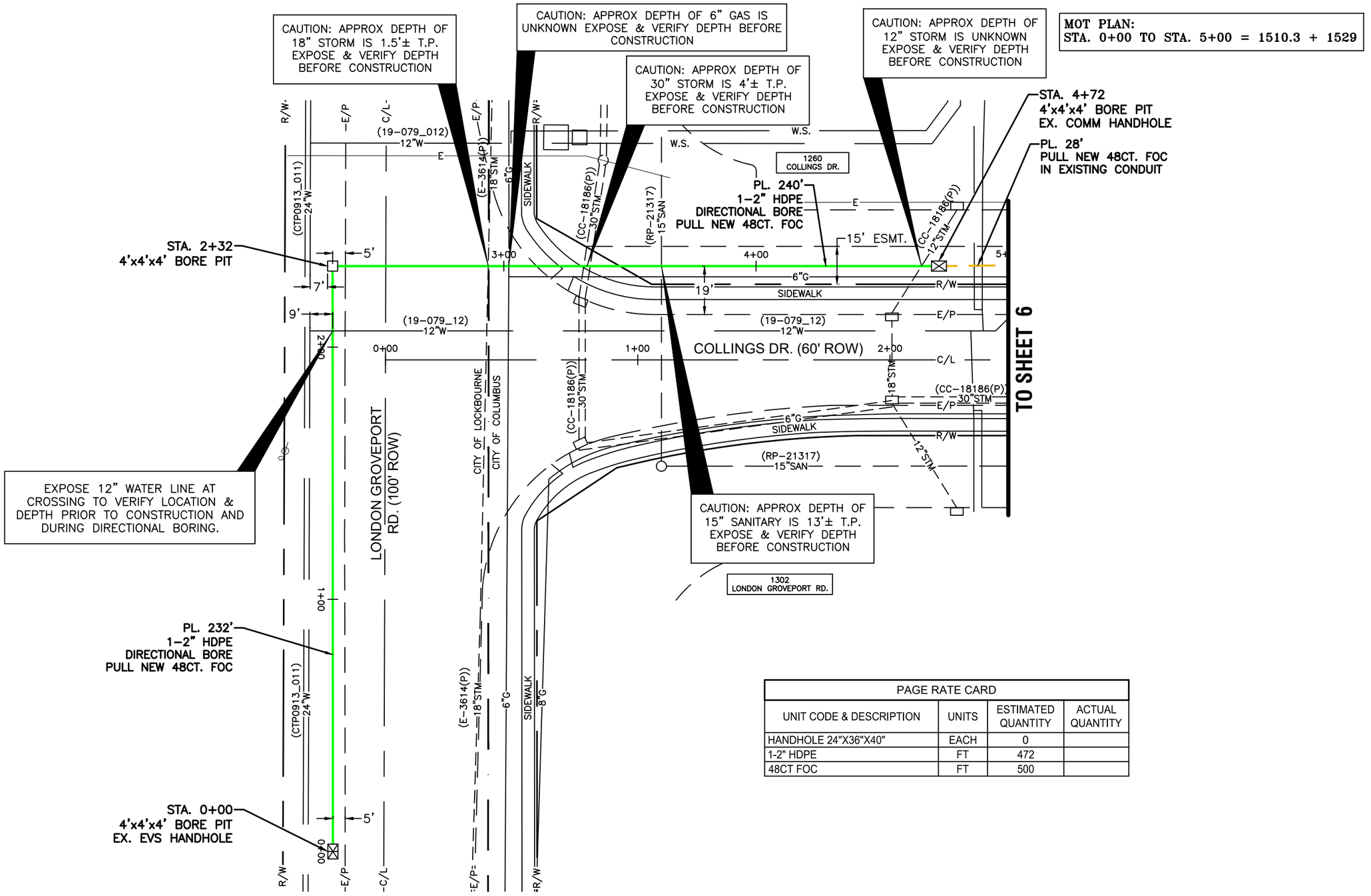

LEGEND:

- G — GAS LINE
- -SAN- — SANITARY SEWER
- STM — STORM SEWER
- W — WATER LINE
- S/L — SLUDGE LINE
- E — ELECTRIC
- TR — TRAFFIC
- TRAFFIC SIGNAL POLE
- TRAFFIC PULL BOX
- PEDESTRIAN PEDESTAL

ASBUILT CHANGES / REVISIONS

DATE	DESCRIPTIONS
–	–
–	–
–	–
–	–
–	–
–	–

PAGE RATE CARD

UNIT CODE & DESCRIPTION	UNITS	ESTIMATED QUANTITY	ACTUAL QUANTITY
HANDHOLE 24"X36"X40"	EACH	0	
1-2" HDPE	FT	472	
48CT FOC	FT	500	

OHIO Utilities Protection SERVICE
Call Before You Dig
1-800-362-2764
OR 8-1-1
CALL TWO WORKING DAYS BEFORE YOU DIG
(NON MEMBERS MUST BE CALLED DIRECTLY)

6040 COLLINGS DR.

DESIGNER: K. KHAY

SCALE BAR = 1:40
0 20 40 60 80

everstream®
FASTER FIBER. BETTER BUSINESS.®

INFORMATION IN THIS DOCUMENT IS PROPRIETARY AND CONFIDENTIAL AND SHALL NOT BE USED, COPIED, REPRODUCED, OR DISCLOSED WITHOUT PRIOR WRITTEN CONSENT OF EVERSTREAM

PLANS PREPARED BY:
NEESAI CAD DESIGNS

Drawing Information: Facility locations are general in nature and are only intended for approximate location reference. Neesai CAD Designs will not be held liable for the accuracy and will not assume responsibility for any damages resulting from these drawings.

LEGEND

- E/P = EX. EDGE OF PAVEMENT
- C/L = EX. CENTER LINE
- R/W = EX. RIGHT OF WAY
- OHF = PROP. OVERHEAD FIBER
- B = PROP. BURIED FIBER
- P/L = EX. PROPERTY LINE
- PROPOSED ANCHOR & GUY
- FOREIGN/EXISTING ANCHOR & GUY
- AERIAL STORAGE LOOP
- BURIED STORAGE LOOP
- PROPOSED HANDHOLE
- EXISTING HANDHOLE
- STORM DRAIN
- FIRE HYDRANT

HORIZ. 1" = 40'
VERT. 1" = 10'

SHEET: 5 OF 22

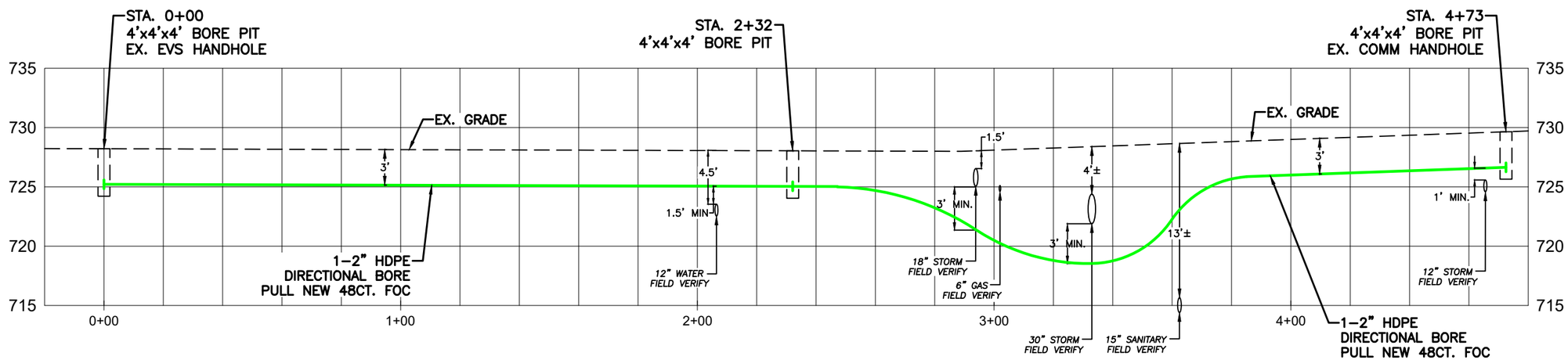

LEGEND:

—G—	GAS LINE
-SAN-	SANITARY SEWER
—STM—	STORM SEWER
—W—	WATER LINE
—S/L—	SLUDGE LINE
—E—	ELECTRIC
—TR—	TRAFFIC
	TRAFFIC SIGNAL POLE
	TRAFFIC PULL BOX
	PEDESTRIAN PEDESTAL

ASBUILT CHANGES / REVISIONS

DATE	DESCRIPTIONS
–	–
–	–
–	–
–	–
–	–
–	–

OHIO Utilities Protection SERVICE
Call Before You Dig
1-800-362-2764
OR 8-1-1
CALL TWO WORKING DAYS BEFORE YOU DIG
(NON MEMBERS MUST BE CALLED DIRECTLY)

6040 COLLINGS DR.

DESIGNER: K. KHAY

SCALE BAR = 1:40
0 20 40 60 80

everstream®
FASTER FIBER. BETTER BUSINESS.®

INFORMATION IN THIS DOCUMENT IS PROPRIETARY AND CONFIDENTIAL AND SHALL NOT BE USED, COPIED, REPRODUCED, OR DISCLOSED WITHOUT PRIOR WRITTEN CONSENT OF EVERSTREAM

PLANS PREPARED BY:
NEESAI CAD DESIGNS

Drawing Information: Facility locations are general in nature and are only intended for approximate location reference. Neesai CAD Deisgns will not be held liable for the accuracy and will not assume responsibility for any damages resulting from these drawings.

LEGEND

—E/P—	= EX. EDGE OF PAVEMENT	—OHF—	= PROP. OVERHEAD FIBER
—C/L—	= EX. CENTER LINE	—B—	= PROP. BURIED FIBER
—R/W—	= EX. RIGHT OF WAY	—P/L—	= EX. PROPERTY LINE

PROPOSED ANCHOR & GUY	PROPOSED HANDHOLE
FOREIGN/EXISTING ANCHOR & GUY	EXISTING HANDHOLE
AERIAL STORAGE LOOP	STORM DRAIN
BURIED STORAGE LOOP	FIRE HYDRANT

HORIZ. 1" = 40'
VERT. 1" = 10'

SHEET:
5A OF 22

MOT PLAN: 1550.1 + 1529

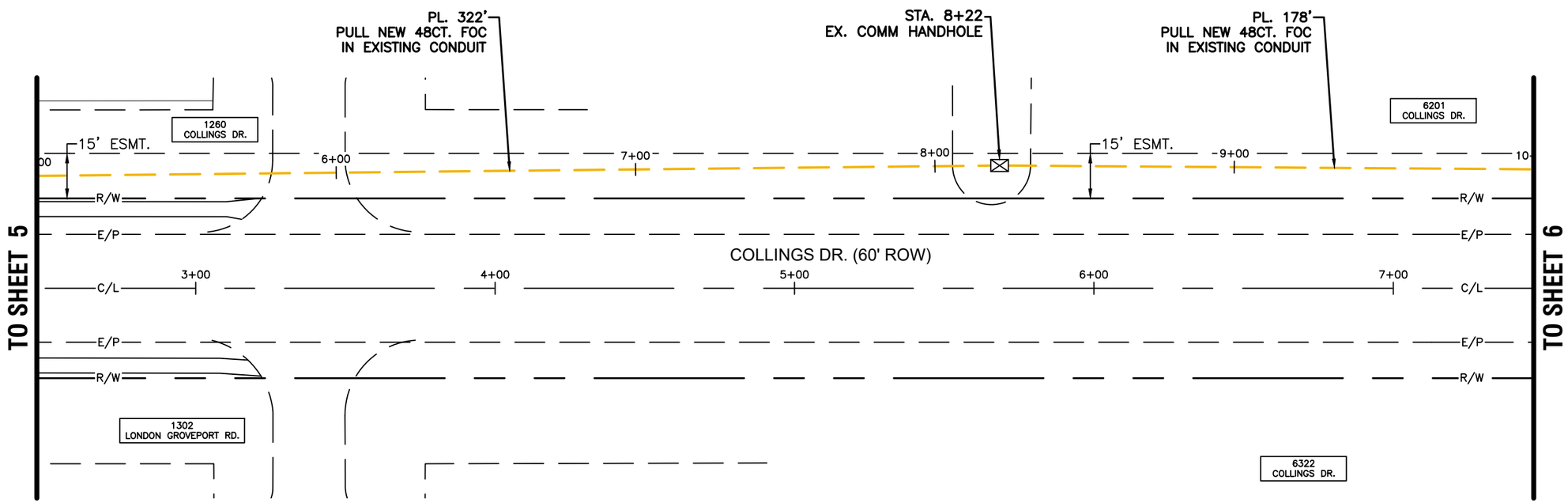

PAGE RATE CARD			
UNIT CODE & DESCRIPTION	UNITS	ESTIMATED QUANTITY	ACTUAL QUANTITY
HANDHOLE 24"X36"X40"	EACH	0	
1-2" HDPE	FT	0	
48CT FOC	FT	500	

CONTRACTOR: SEE PERMIT MOT NOTE #8 a & b – EASEMENTS

LEGEND:

- G — GAS LINE
- -SAN- — SANITARY SEWER
- STM — STORM SEWER
- W — WATER LINE
- S/L — SLUDGE LINE
- E — ELECTRIC
- TR — TRAFFIC
- TRAFFIC SIGNAL POLE
- TRAFFIC PULL BOX
- PEDESTRIAN PEDESTAL

ASBUILT CHANGES / REVISIONS

DATE	DESCRIPTIONS
–	–
–	–
–	–
–	–
–	–

OHIO Utilities Protection SERVICE
Call Before You Dig
1-800-362-2764
OR 8-1-1
CALL TWO WORKING DAYS BEFORE YOU DIG
(NON MEMBERS MUST BE CALLED DIRECTLY)

6040 COLLINGS DR.

DESIGNER: K. KHAY

SCALE BAR = 1:40
0 20 40 60 80

everstream®
FASTER FIBER. BETTER BUSINESS.®

INFORMATION IN THIS DOCUMENT IS PROPRIETARY AND CONFIDENTIAL AND SHALL NOT BE USED, COPIED, REPRODUCED, OR DISCLOSED WITHOUT PRIOR WRITTEN CONSENT OF EVERSTREAM

PLANS PREPARED BY:
NEESAI CAD DESIGNS

Drawing Information: Facility locations are general in nature and are only intended for approximate location reference. Neesai CAD Deisgns will not be held liable for the accuracy and will not assume responsibility for any damages resulting from these drawings.

LEGEND

E/P = EX. EDGE OF PAVEMENT	OHF = PROP. OVERHEAD FIBER	PROPOSED ANCHOR & GUY	PROPOSED HANDHOLE
C/L = EX. CENTER LINE	B = PROP. BURIED FIBER	FOREIGN/EXISTING ANCHOR & GUY	EXISTING HANDHOLE
R/W = EX. RIGHT OF WAY	P/L = EX. PROPERTY LINE	AERIAL STORAGE LOOP	STORM DRAIN
		BURIED STORAGE LOOP	FIRE HYDRANT

HORIZ. 1" = 40'
VERT. 1" = 10'

SHEET: 6 OF 22

MOT PLAN: 1550.1 + 1529

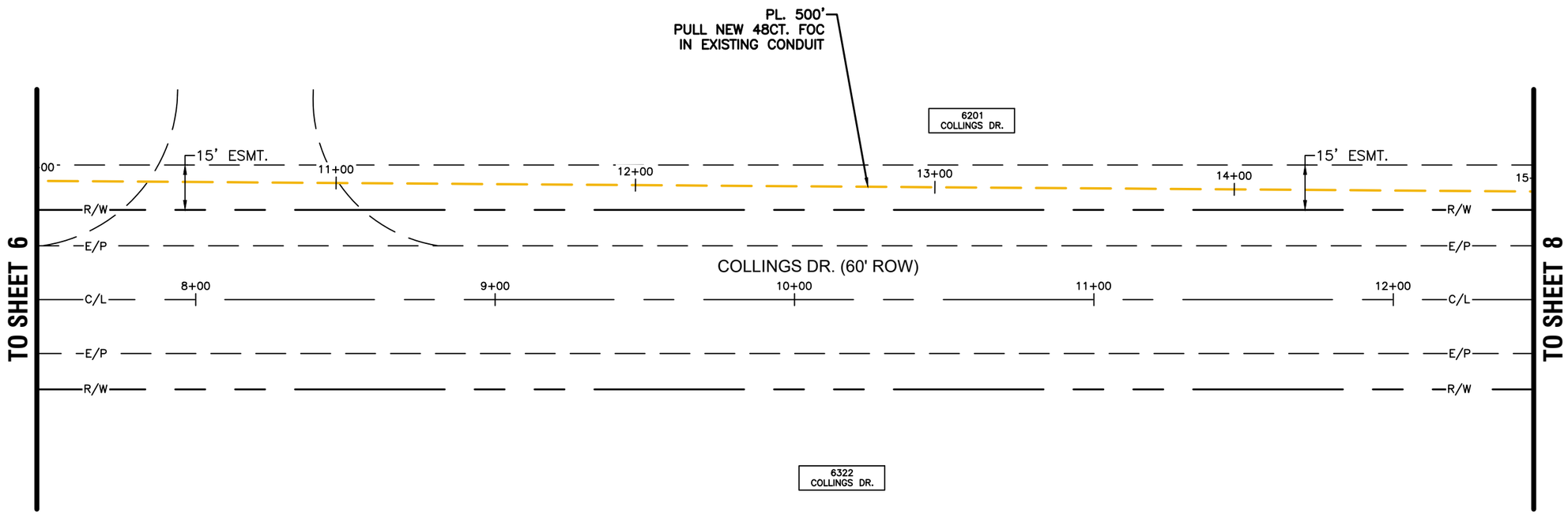

PAGE RATE CARD			
UNIT CODE & DESCRIPTION	UNITS	ESTIMATED QUANTITY	ACTUAL QUANTITY
HANDHOLE 24"X36"X40"	EACH	0	
1-2" HDPE	FT	0	
48CT FOC	FT	500	

CONTRACTOR: SEE PERMIT MOT NOTE #8 a & b – EASEMENTS

LEGEND:

- G — GAS LINE
- -SAN- — SANITARY SEWER
- STM — STORM SEWER
- W — WATER LINE
- S/L — SLUDGE LINE
- E — ELECTRIC
- TR — TRAFFIC
- TRAFFIC SIGNAL POLE
- TRAFFIC PULL BOX
- PEDESTRIAN PEDESTAL

ASBUILT CHANGES / REVISIONS

DATE	DESCRIPTIONS
–	–
–	–
–	–
–	–
–	–

OHIO Utilities Protection SERVICE
Call Before You Dig
1-800-362-2764
OR 8-1-1
CALL TWO WORKING DAYS BEFORE YOU DIG
(NON MEMBERS MUST BE CALLED DIRECTLY)

6040 COLLINGS DR.

DESIGNER: K. KHAY

SCALE BAR = 1:40
0 20 40 60 80

everstream®
FASTER FIBER. BETTER BUSINESS.®

INFORMATION IN THIS DOCUMENT IS PROPRIETARY AND CONFIDENTIAL AND SHALL NOT BE USED, COPIED, REPRODUCED, OR DISCLOSED WITHOUT PRIOR WRITTEN CONSENT OF EVERSTREAM

PLANS PREPARED BY:
NEESAI CAD DESIGNS

Drawing Information: Facility locations are general in nature and are only intended for approximate location reference. Neesai CAD Deisgns will not be held liable for the accuracy and will not assume responsibility for any damages resulting from these drawings.

LEGEND

- E/P = EX. EDGE OF PAVEMENT
- C/L = EX. CENTER LINE
- R/W = EX. RIGHT OF WAY
- OHF = PROP. OVERHEAD FIBER
- B = PROP. BURIED FIBER
- P/L = EX. PROPERTY LINE
- PROPOSED ANCHOR & GUY
- FOREIGN/EXISTING ANCHOR & GUY
- AERIAL STORAGE LOOP
- BURIED STORAGE LOOP
- PROPOSED HANDHOLE
- EXISTING HANDHOLE
- STORM DRAIN
- FIRE HYDRANT

HORIZ. 1" = 40'
VERT. 1" = 10'

SHEET: 7 OF 22

MOT PLAN: 1550.1 + 1529

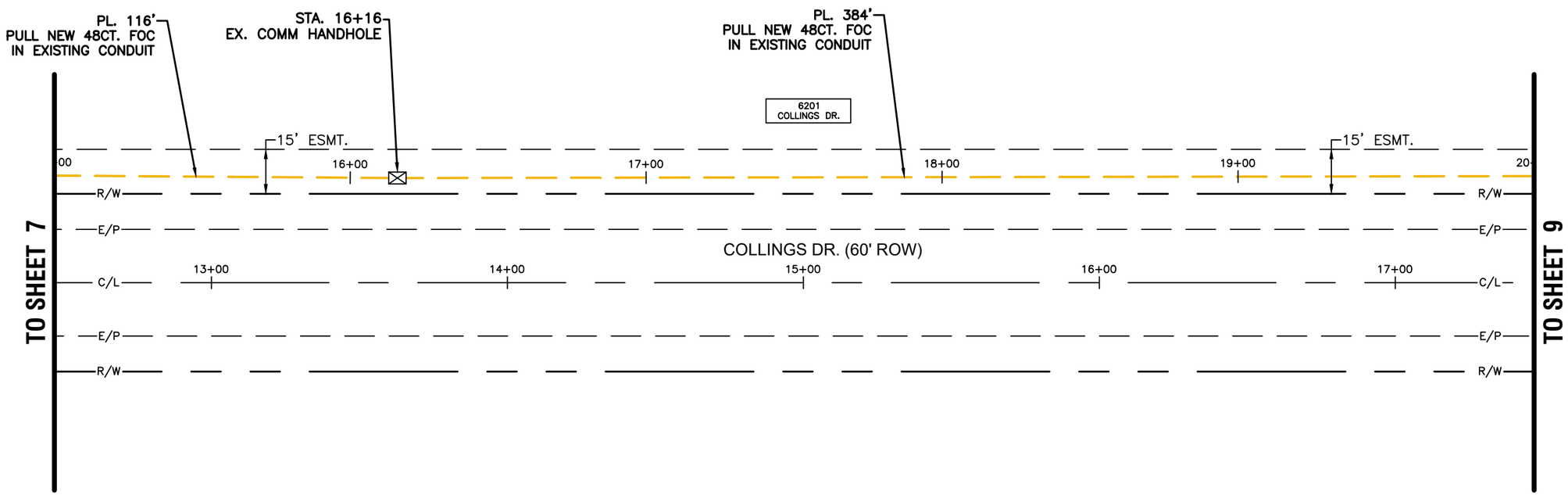

PAGE RATE CARD			
UNIT CODE & DESCRIPTION	UNITS	ESTIMATED QUANTITY	ACTUAL QUANTITY
HANDHOLE 24"X36"X40"	EACH	0	
1-2" HDPE	FT	0	
48CT FOC	FT	500	

CONTRACTOR: SEE PERMIT MOT NOTE #8 a & b – EASEMENTS

LEGEND:

- G — GAS LINE
- -SAN- — SANITARY SEWER
- STM — STORM SEWER
- W — WATER LINE
- S/L — SLUDGE LINE
- E — ELECTRIC
- TR — TRAFFIC
- TRAFFIC SIGNAL POLE
- TRAFFIC PULL BOX
- PEDESTRIAN PEDESTAL

ASBUILT CHANGES / REVISIONS

DATE	DESCRIPTIONS
–	–
–	–
–	–
–	–
–	–

OHIO Utilities Protection SERVICE
Call Before You Dig
1-800-362-2764
OR 8-1-1
CALL TWO WORKING DAYS BEFORE YOU DIG
(NON MEMBERS MUST BE CALLED DIRECTLY)

6040 COLLINGS DR.

DESIGNER: K. KHAY

SCALE BAR = 1:40
0 20 40 60 80

everstream®
FASTER FIBER. BETTER BUSINESS.®

INFORMATION IN THIS DOCUMENT IS PROPRIETARY AND CONFIDENTIAL AND SHALL NOT BE USED, COPIED, REPRODUCED, OR DISCLOSED WITHOUT PRIOR WRITTEN CONSENT OF EVERSTREAM

PLANS PREPARED BY:
NEESAI CAD DESIGNS

Drawing Information: Facility locations are general in nature and are only intended for approximate location reference. Neesai CAD Deisgns will not be held liable for the accuracy and will not assume responsibility for any damages resulting from these drawings.

LEGEND

- E/P = EX. EDGE OF PAVEMENT
- C/L = EX. CENTER LINE
- R/W = EX. RIGHT OF WAY
- OHF = PROP. OVERHEAD FIBER
- B = PROP. BURIED FIBER
- P/L = EX. PROPERTY LINE
- PROPOSED ANCHOR & GUY
- FOREIGN/EXISTING ANCHOR & GUY
- AERIAL STORAGE LOOP
- BURIED STORAGE LOOP
- PROPOSED HANDHOLE
- EXISTING HANDHOLE
- STORM DRAIN
- FIRE HYDRANT

HORIZ. 1" = 40'
VERT. 1" = 10'

MOT PLAN: 1550.1 + 1529

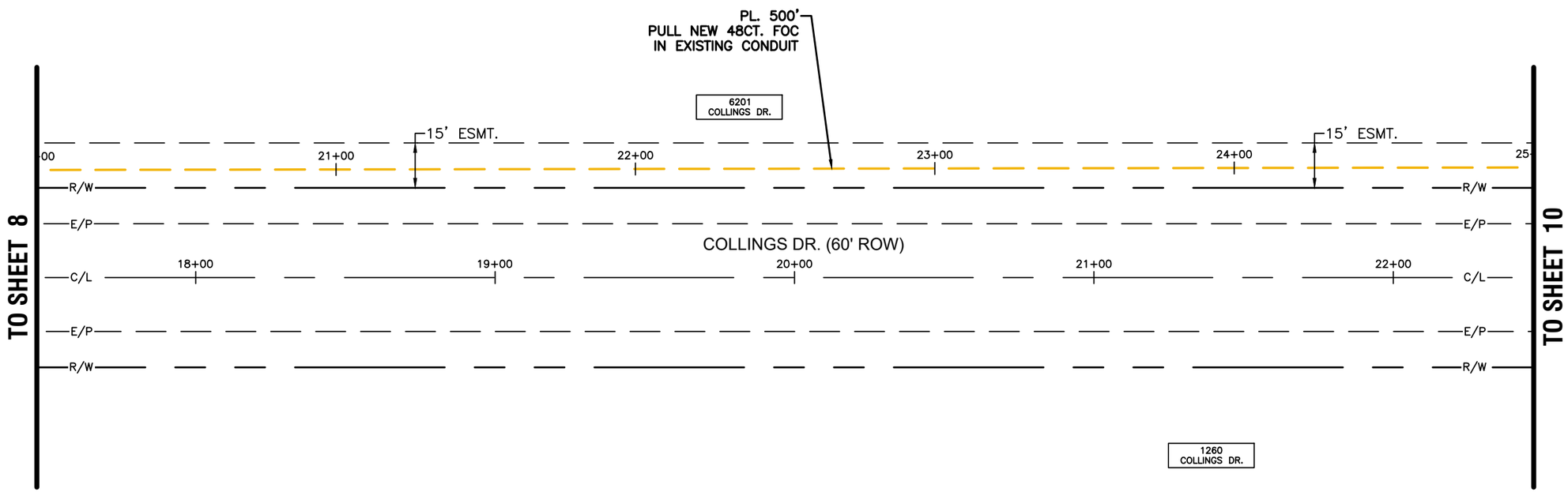

PAGE RATE CARD			
UNIT CODE & DESCRIPTION	UNITS	ESTIMATED QUANTITY	ACTUAL QUANTITY
HANDHOLE 24"X36"X40"	EACH	0	
1-2" HDPE	FT	0	
48CT FOC	FT	500	

CONTRACTOR: SEE PERMIT MOT NOTE #8 a & b – EASEMENTS

LEGEND:

- G — GAS LINE
- -SAN- — SANITARY SEWER
- STM — STORM SEWER
- W — WATER LINE
- S/L — SLUDGE LINE
- E — ELECTRIC
- TR — TRAFFIC
- TRAFFIC SIGNAL POLE
- TRAFFIC PULL BOX
- PEDESTRIAN PEDESTAL

ASBUILT CHANGES / REVISIONS

DATE	DESCRIPTIONS
–	–
–	–
–	–
–	–
–	–

OHIO Utilities Protection SERVICE
Call Before You Dig
1-800-362-2764
OR 8-1-1
CALL TWO WORKING DAYS BEFORE YOU DIG
(NON MEMBERS MUST BE CALLED DIRECTLY)

6040 COLLINGS DR.

DESIGNER: K. KHAY

SCALE BAR = 1:40
0 20 40 60 80

everstream®
FASTER FIBER. BETTER BUSINESS.®

INFORMATION IN THIS DOCUMENT IS PROPRIETARY AND CONFIDENTIAL AND SHALL NOT BE USED, COPIED, REPRODUCED, OR DISCLOSED WITHOUT PRIOR WRITTEN CONSENT OF EVERSTREAM

PLANS PREPARED BY:
NEESAI CAD DESIGNS

Drawing Information: Facility locations are general in nature and are only intended for approximate location reference. Neesai CAD Deisgns will not be held liable for the accuracy and will not assume responsibility for any damages resulting from these drawings.

LEGEND

E/P = EX. EDGE OF PAVEMENT		OHF = PROP. OVERHEAD FIBER	
C/L = EX. CENTER LINE		B = PROP. BURIED FIBER	
R/W = EX. RIGHT OF WAY		P/L = EX. PROPERTY LINE	

PROPOSED ANCHOR & GUY	PROPOSED HANDHOLE
FOREIGN/EXISTING ANCHOR & GUY	EXISTING HANDHOLE
AERIAL STORAGE LOOP	STORM DRAIN
BURIED STORAGE LOOP	FIRE HYDRANT

HORIZ. 1" = 40'
VERT. 1" = 10'

SHEET: 9 OF 22

MOT PLAN: 1550.1 + 1529

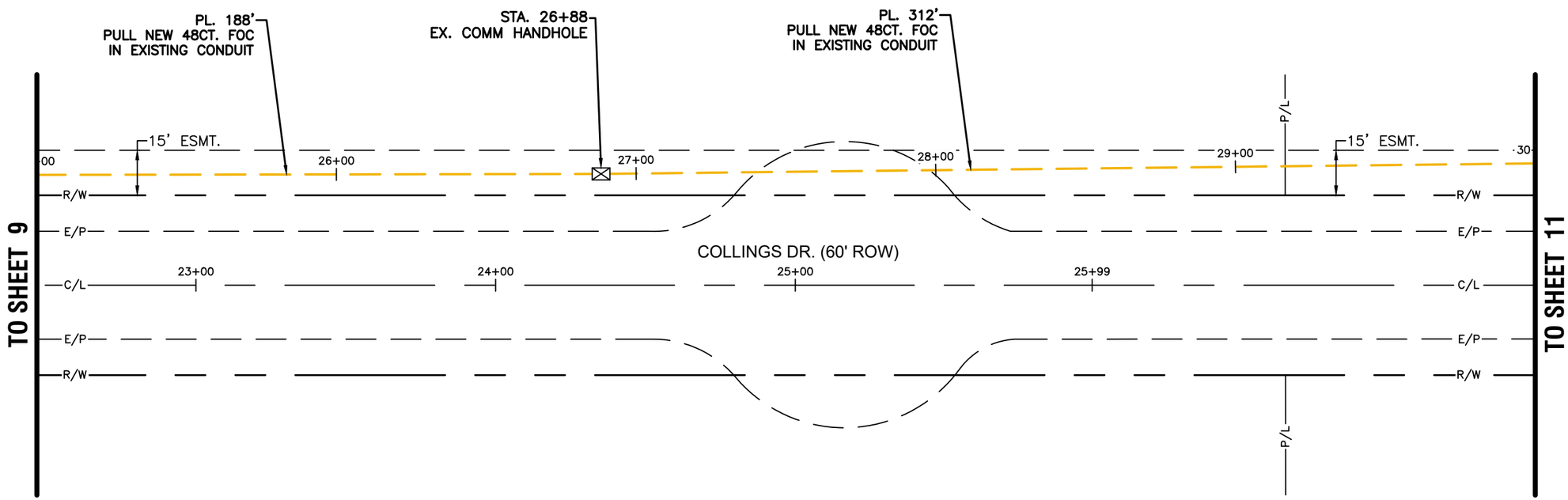

PAGE RATE CARD			
UNIT CODE & DESCRIPTION	UNITS	ESTIMATED QUANTITY	ACTUAL QUANTITY
HANDHOLE 24"X36"X40"	EACH	0	
1-2" HDPE	FT	0	
48CT FOC	FT	500	

CONTRACTOR: SEE PERMIT MOT NOTE #8 a & b – EASEMENTS

LEGEND:

- G — GAS LINE
- -SAN- — SANITARY SEWER
- STM — STORM SEWER
- W — WATER LINE
- S/L — SLUDGE LINE
- E — ELECTRIC
- TR — TRAFFIC
- TRAFFIC SIGNAL POLE
- TRAFFIC PULL BOX
- PEDESTRIAN PEDESTAL

ASBUILT CHANGES / REVISIONS

DATE	DESCRIPTIONS
–	–
–	–
–	–
–	–
–	–

OHIO Utilities Protection SERVICE
Call Before You Dig
1-800-362-2764
OR 8-1-1
CALL TWO WORKING DAYS BEFORE YOU DIG
(NON MEMBERS MUST BE CALLED DIRECTLY)

6040 COLLINGS DR.

DESIGNER: K. KHAY

SCALE BAR = 1:40
0 20 40 60 80

everstream®
FASTER FIBER. BETTER BUSINESS.®

INFORMATION IN THIS DOCUMENT IS PROPRIETARY AND CONFIDENTIAL AND SHALL NOT BE USED, COPIED, REPRODUCED, OR DISCLOSED WITHOUT PRIOR WRITTEN CONSENT OF EVERSTREAM

PLANS PREPARED BY:
NEESAI CAD DESIGNS

Drawing Information: Facility locations are general in nature and are only intended for approximate location reference. Neesai CAD Deisgns will not be held liable for the accuracy and will not assume responsibility for any damages resulting from these drawings.

LEGEND

- E/P = EX. EDGE OF PAVEMENT
- C/L = EX. CENTER LINE
- R/W = EX. RIGHT OF WAY
- OHF = PROP. OVERHEAD FIBER
- B = PROP. BURIED FIBER
- P/L = EX. PROPERTY LINE
- PROPOSED ANCHOR & GUY
- FOREIGN/EXISTING ANCHOR & GUY
- AERIAL STORAGE LOOP
- BURIED STORAGE LOOP
- PROPOSED HANDHOLE
- EXISTING HANDHOLE
- STORM DRAIN
- FIRE HYDRANT

HORIZ. 1" = 40'
VERT. 1" = 10'

SHEET: 10 OF 22

MOT PLAN: 1550.1 + 1529

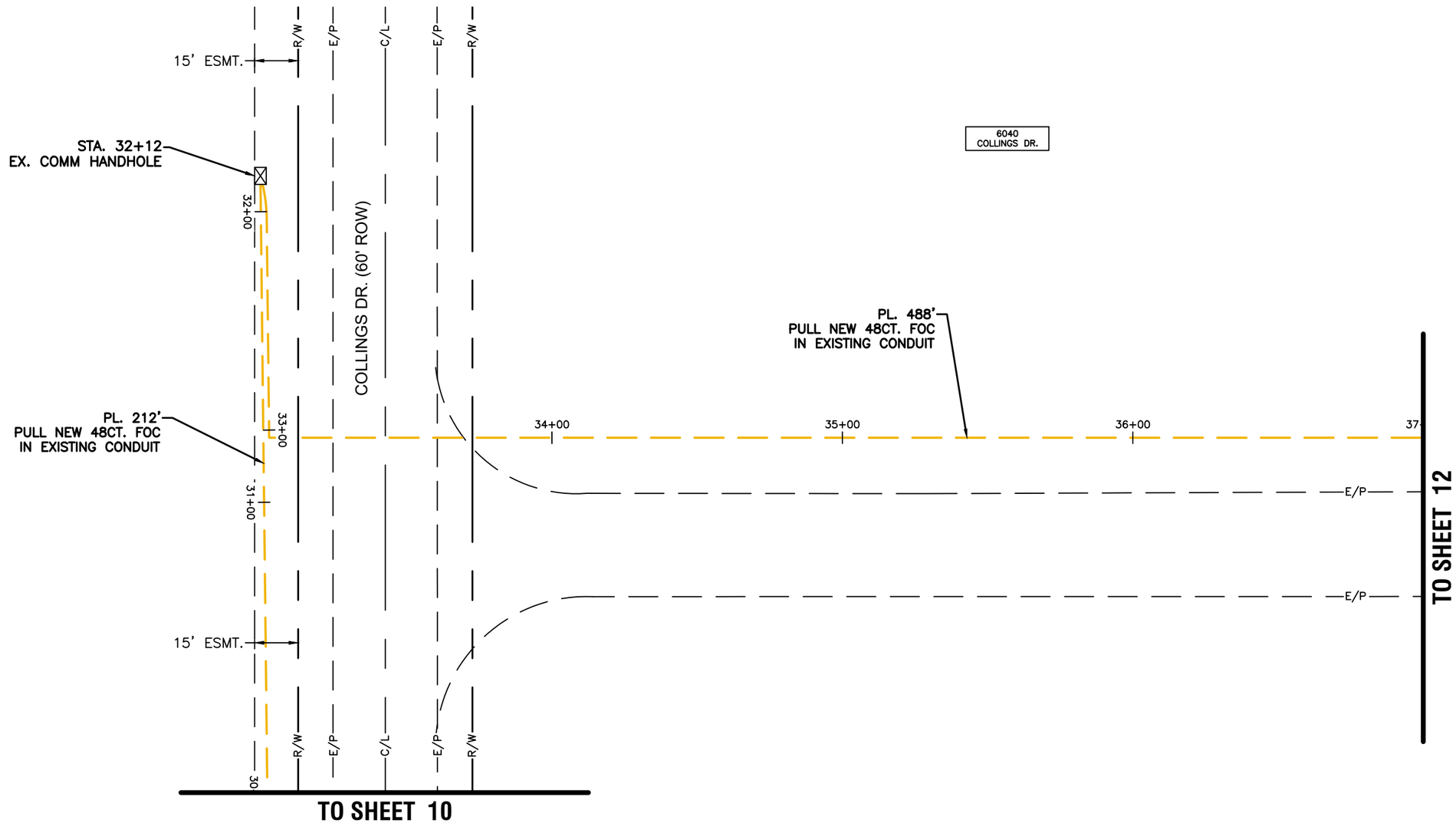

PAGE RATE CARD			
UNIT CODE & DESCRIPTION	UNITS	ESTIMATED QUANTITY	ACTUAL QUANTITY
HANDHOLE 24"X36"X40"	EACH	0	
1-2" HDPE	FT	0	
48CT FOC	FT	600	

N

CONTRACTOR: SEE
PERMIT MOT NOTE #8
a & b – EASEMENTS

LEGEND:

- G — GAS LINE
- -SAN- — SANITARY SEWER
- STM — STORM SEWER
- W — WATER LINE
- S/L — SLUDGE LINE
- E — ELECTRIC
- TR — TRAFFIC
- TRAFFIC SIGNAL POLE
- TRAFFIC PULL BOX
- PEDESTRIAN PEDESTAL

ASBUILT CHANGES / REVISIONS

DATE	DESCRIPTIONS
–	–
–	–
–	–
–	–
–	–
–	–

OHIO Utilities Protection SERVICE
Call Before You Dig
1-800-362-2764
OR 8-1-1
CALL TWO WORKING DAYS BEFORE YOU DIG
(NON MEMBERS MUST BE CALLED DIRECTLY)

6040 COLLINGS DR.

DESIGNER: K. KHAY

SCALE BAR = 1:40
0 20 40 60 80

everstream®
FASTER FIBER. BETTER BUSINESS.®

INFORMATION IN THIS DOCUMENT IS PROPRIETARY AND CONFIDENTIAL AND SHALL NOT BE USED, COPIED, REPRODUCED, OR DISCLOSED WITHOUT PRIOR WRITTEN CONSENT OF EVERSTREAM

PLANS PREPARED BY:
NEESAI CAD DESIGNS

Drawing Information: Facility locations are general in nature and are only intended for approximate location reference. Neesai CAD Deisgns will not be held liable for the accuracy and will not assume responsibility for any damages resulting from these drawings.

LEGEND

- E/P = EX. EDGE OF PAVEMENT
- C/L = EX. CENTER LINE
- R/W = EX. RIGHT OF WAY
- OHF = PROP. OVERHEAD FIBER
- B = PROP. BURIED FIBER
- P/L = EX. PROPERTY LINE
- PROPOSED ANCHOR & GUY
- FOREIGN/EXISTING ANCHOR & GUY
- AERIAL STORAGE LOOP
- BURIED STORAGE LOOP
- PROPOSED HANDHOLE
- EXISTING HANDHOLE
- STORM DRAIN
- FIRE HYDRANT

HORIZ. 1" = 40'
VERT. 1" = 10'

SHEET: 11 OF 22

MOT PLAN: 1550.1 + 1529

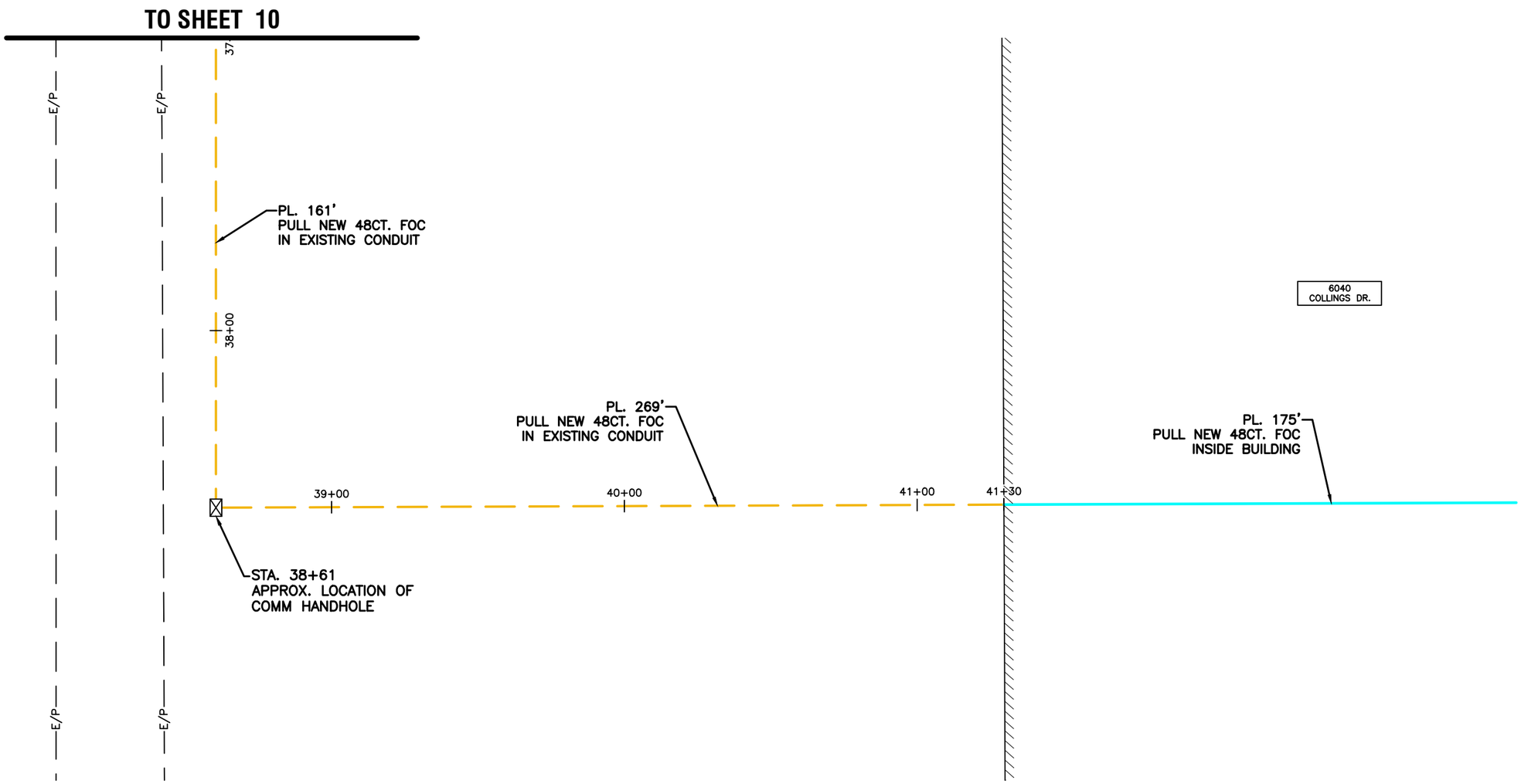

PAGE RATE CARD			
UNIT CODE & DESCRIPTION	UNITS	ESTIMATED QUANTITY	ACTUAL QUANTITY
HANDHOLE 24"X36"X40"	EACH	0	
1-2" HDPE	FT	0	
48CT FOC	FT	605	

CONTRACTOR: SEE
PERMIT MOT NOTE #8
a & b – EASEMENTS

LEGEND:

- G — GAS LINE
- -SAN- — SANITARY SEWER
- STM — STORM SEWER
- W — WATER LINE
- S/L — SLUDGE LINE
- E — ELECTRIC
- TR — TRAFFIC
- TRAFFIC SIGNAL POLE
- TRAFFIC PULL BOX
- PEDESTRIAN PEDESTAL

ASBUILT CHANGES / REVISIONS

DATE	DESCRIPTIONS
–	–
–	–
–	–
–	–
–	–
–	–

OHIO Utilities Protection SERVICE
Call Before You Dig
1-800-362-2764
OR 8-1-1
CALL TWO WORKING DAYS BEFORE YOU DIG
(NON MEMBERS MUST BE CALLED DIRECTLY)

6040 COLLINGS DR.

DESIGNER: K. KHAY

SCALE BAR = 1:40
0 20 40 60 80

everstream®
FASTER FIBER. BETTER BUSINESS.®

INFORMATION IN THIS DOCUMENT IS PROPRIETARY AND CONFIDENTIAL AND SHALL NOT BE USED, COPIED, REPRODUCED, OR DISCLOSED WITHOUT PRIOR WRITTEN CONSENT OF EVERSTREAM

PLANS PREPARED BY:
NEESAI CAD DESIGNS

Drawing Information: Facility locations are general in nature and are only intended for approximate location reference. Neesai CAD Deisgns will not be held liable for the accuracy and will not assume responsibility for any damages resulting from these drawings.

LEGEND

- E/P = EX. EDGE OF PAVEMENT
- C/L = EX. CENTER LINE
- R/W = EX. RIGHT OF WAY
- OHF = PROP. OVERHEAD FIBER
- B = PROP. BURIED FIBER
- P/L = EX. PROPERTY LINE
- PROPOSED ANCHOR & GUY
- FOREIGN/EXISTING ANCHOR & GUY
- AERIAL STORAGE LOOP
- BURIED STORAGE LOOP
- PROPOSED HANDHOLE
- EXISTING HANDHOLE
- STORM DRAIN
- FIRE HYDRANT

HORIZ. 1" = 40'
VERT. 1" = 10'

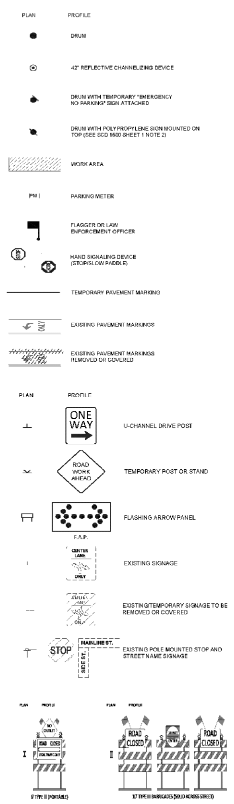

NOTES

1. ADVANCE WARNING SIGNAGE

SIZE: MINIMUM SIGN SIZE IS 36". INCREASE SIZE TO 48" ON ROADWAYS WITH POSTED SPEED EQUAL TO OR GREATER THAN 45 MPH OR ON ARTERIAL ROADWAYS WITH 4 LANES OR MORE. ONE-WAY STREETS REQUIRE SIGNS POSTED ON BOTH SIDES OF ROADWAY.

SPACING: SPACING BETWEEN SIGNS IS 100' FOR SPEEDS LESS THAN OR EQUAL TO 40 MPH AND 350' FOR SPEEDS GREATER THAN OR EQUAL TO 45 MPH PER TABLE 2: ADVANCE WARNING SIGNS. FIRST SIGN IN SERIES IS PLACED 100' OR 350' PRIOR TO THE FIRST DRUM OR DEVICE. MAINTAIN 200' CLEARANCE FROM EXISTING SIGNAGE WHENEVER POSSIBLE. INSTALL TYPE A LOW INTENSITY FLASHING LIGHTS ON SIGNS AS DIRECTED BY THE OMUTCD PART 6 SECTION 6F-83, CURRENT EDITION. WHEN TEMPORARY TRAFFIC CONTROL DEVICES ARE USED FOR NIGHTTIME ROADWAY AND PEDESTRIAN MAINTENANCE OF TRAFFIC CONTROL SETUPS.

CONFLICTING SIGNS: REMOVE OR COVER EXISTING SIGNS LOCATED WITHIN 250' OF FIRST WARNING SIGN AND ALL CONFLICTING SIGNS WITHIN WORK ZONE. END ROAD WORK SIGNS, G-20-2, SHALL ONLY BE USED WHEN CONSTRUCTION EXCEEDS 180 DAYS, AS WHEN SHOWN IN A ROADWAY MAINTENANCE OF TRAFFIC PLAN, OR AS DIRECTED BY THE ENGINEER.

2. CHANNELIZING DEVICES

DRUMS: DRUMS SHALL HAVE TYPE C OR TYPE D 360 DEGREE STEADY BURN WARNING LIGHTS FOR USE AT NIGHT. DURING DAYTIME OPERATIONS 42" CHANNELIZING DEVICES MAY BE SUBSTITUTED FOR DRUMS WITH THE PERMISSION OF THE ENGINEER.

DEVICE SPACING: 40' ON TANGENTS, 20' TAPERS, 6' TO 8' ON RADII 10' MINIMUM LANE WIDTHS SHALL BE MAINTAINED. A MINIMUM OF 5 DRUMS SHALL BE USED TO CLOSE THE UPSTREAM SHOULDER.

DRUM MOUNTED SIGNS: CONTRACTOR MAY USE A POLYPROPYLENE FLUTED SHEET FOR SIGNING WHEN PLACING ON TOP OF DRUMS. SIGNS SHALL BE ATTACHED TO THE DRUMS USING APPROPRIATE HARDWARE. ONLY "KEEP RIGHT", "ONE-WAY", AND TURN RESTRICTION SIGNS SHALL BE POSTED ON TOP OF DRUMS.

ALL SIGNS SHALL MAINTAIN RETROREFLECTIVITY. SIGN SUBSTRATE SHALL CONFORM TO FHWA SIGN SUBSTRATES FOR PLASTIC DRUMS AND WORK ZONE ACCEPTANCE LETTER WZ-45 "CRASHWORTHY WORK ZONE DEVICES" AS OF OCTOBER 1, 2000.

3. TAPER LENGTHS

TAPER LENGTH CRITERIA FOR TEMPORARY TRAFFIC CONTROL ZONES SHALL BE PER TABLE 1: TAPER LENGTHS FOR TEMPORARY TRAFFIC CONTROL ZONE FOR CALCULATED TAPER LENGTHS.

EXIT TAPERS SHALL BE 100' PER LANE, MAXIMUM.

4. TEMPORARY MARKINGS

WHEN LANE CLOSURES EXCEED 14 CALENDAR DAYS, TEMPORARY MARKINGS (740.06) TAPE, MINIMUM 4'-0" LONG SEGMENTS SHALL BE INSTALLED FOR ALL CENTERLINES, CHANNELS, AND LANE LINES. CONFLICTING MARKINGS SHALL BE COVERED WITH NON-REFLECTIVE TAPE OR REMOVED. ITEM 642 PAINT SHALL BE USED IF AN AREA IS TO BE MILLED AND/OR RESURFACED OR PLACED ON THE INTERMEDIATE ASPHALT COURSE.

5. GENERAL NOTES AND MODIFICATIONS OF STANDARD CONSTRUCTION DRAWINGS

THE USE OF ANY MAINTENANCE OF TRAFFIC STANDARD DRAWING SHALL REQUIRE A MAINTENANCE OF TRAFFIC TABLE PROVIDED BY THE DIVISION OF DESIGN AND CONSTRUCTION. MODIFICATIONS TO THE TEMPORARY TRAFFIC CONTROL STANDARD CONSTRUCTION DRAWINGS MAY OCCUR WHEN FIELD CONDITIONS DICTATE THAT THE APPLICATION OF THE STANDARD DRAWING DOES NOT MEET ITS INTENDED PURPOSE. ONLY THE ENGINEER MAY DEVIATE FROM THESE DRAWINGS.

6. SCD 1500 REFERENCE

ALL NOTES, TABLES, FIGURES, AND LEGENDS INCLUDED AS PART OF SCD 1500 ARE TO BE APPLIED TO ALL OTHER MAINTENANCE OF TRAFFIC SCD (1501-1599).

TABLE 1: TAPER LENGTHS FOR TEMPORARY TRAFFIC CONTROL ZONES †

D: TAPER RATE (SHOULDER) CLOSURE OMUTCD 0.33L = WS²/60 — 0.33L = WS

WIDTH OF SHOULDER	25 MPH	30 MPH	35 MPH	40 MPH	45 MPH	50 MPH	55 MPH	60 MPH
6'	*	*	*	53'	89'	99'	109'	119'
7'	*	*	47'	62'	104'	116'	127'	139'
8'	*	*	54'	70'	119'	132'	145'	158'
9'	*	45'	61'	79'	134'	149'	163'	178'
10'	*	50'	67'	88'	149'	165'	182'	198'
11'	*	54'	74'	97'	163'	182'	200'	218'
12'	*	59'	81'	106'	178'	198'	218'	238'

E: TAPER RATE (MERGE) CLOSURE OMUTCD L = WS²/60 — L = WS

WIDTH OF LANE CLOSED	25 MPH	30 MPH	35 MPH	40 MPH	45 MPH	50 MPH	55 MPH	60 MPH
10'	104'	150'	204'	267'	450'	500'	550'	600'
11'	115'	165'	225'	293'	495'	550'	605'	660'
12'	125'	180'	245'	320'	540'	600'	660'	720'
13'	135'	195'	265'	347'	585'	650'	715'	780'

F: TAPER RATE (SHIFT) CLOSURE OMUTCD 0.5L = WS²/60 — L = WS

WIDTH OF LANE SHIFT	25 MPH	30 MPH	35 MPH	40 MPH	45 MPH	50 MPH	55 MPH	60 MPH
10'	52'	75'	102'	133'	450'	500'	550'	600'
11'	57'	83'	112'	147'	495'	550'	605'	660'
12'	62'	90'	123'	160'	540'	600'	660'	720'
13'	68'	98'	133'	173'	585'	650'	715'	780'

NOTES:
1. WHEN PAVED SHOULDERS ARE CLOSED IN CONJUNCTION WITH A RIGHT LANE CLOSURE OR SHIFT ADD SHOULDER WIDTH TO LANE WIDTH TO CALCULATE TAPER LENGTH.
2. FOR PAVED SHOULDERS UNDER 6' USE 40 TAPER LENGTH.
3. L = TAPER LENGTH, W = WIDTH OF OFFSET, S = POSTED SPEED LIMIT OR 85TH PERCENTILE SPEED
* = 40'

† TABLE DERIVED FROM OMUTCD, CURRENT EDITION, PART 6, TABLES 6C-3 AND 6C-4

TABLE 2: ADVANCE WARNING SIGNS ‡

ROAD TYPE	DISTANCE BETWEEN SIGNS ** A	B	C
URBAN (LOW SPEED*) ≤ 40 MPH	100 FT	100 FT	100 FT
URBAN (HIGH SPEED*) ≥ 45 MPH	350 FT	350 FT	350 FT
RURAL	500 FT	500 FT	500 FT
EXPRESSWAY/FREEWAY	1,000 FT	1,500 FT	2,640 FT

‡ FROM OMUTCD, CURRENT EDITION, PART 6 TABLE 6C-1

* SPEED CATEGORY DETERMINED BY THE CITY OF COLUMBUS TO BE LOW SPEED (POSTED SPEED LIMIT LESS THAN OR EQUAL TO 40MPH) OR HIGH SPEED (POSTED SPEED LIMIT GREATER THAN OR EQUAL TO 45MPH)

**THE COLUMN HEADINGS 'A', 'B', 'C', 'D', 'E', AND 'F' ARE THE DIMENSIONS SHOWN IN STANDARD DRAWINGS AND ARE DEFINED AS:

'A' = THE DISTANCE FROM THE TRANSITION OR POINT OF RESTRICTION TO THE FIRST SIGN (CLOSEST TO THE TTC ZONE).
'B' = THE 'B' DIMENSION IS THE DISTANCE BETWEEN THE FIRST AND SECOND SIGN.
'C' = DIMENSION IS THE DISTANCE BETWEEN THE SECOND AND THIRD SIGN (FURTHEST UPSTREAM FROM THE TTC ZONE).
'D' = SHOULDER TAPER LENGTH.
'E' = MERGE TAPER LENGTH.
'F' = SHIFT TAPER LENGTH.

TABLE 3: TANGENT LENGTHS FOR TEMPORARY TRAFFIC CONTROL ZONES ⅄

ROAD TYPE	ZONE SETUP	
LOW SPEED < 40 MPH	BETWEEN MERGE AND SHIFT TAPERS	(⅓)L = WS²
HIGH SPEED > 45 MPH	BETWEEN MERGE AND SHIFT TAPERS	L = WS
LOW SPEED < 40 MPH	BETWEEN 2 MERGE TAPERS	L = WS²
HIGH SPEED > 45 MPH	BETWEEN 2 MERGE TAPERS	2L = WS

⅄ TANGENT SECTION LENGTHS MAY BE CHANGED BY ENGINEER.

TYPICAL ADV. WARNING SIGNS FOR BIKE LANE CLOSURES

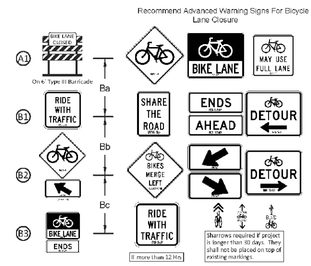

TABLE 4: BIKES LANE CLOSURE SIGN SPACING

ROAD TYPE	DISTANCE BETWEEN SIGNS ** Ba	Bb	Bc
URBAN (LOW SPEED*) ≤ 40 MPH	50'min-100' max	50'min-100' max	50'min-100' max
URBAN (HIGH SPEED*) ≥ 45 MPH	100'min 200' max	100'min 200' max	100'min 200' max

TYPICAL SIDEWALK CLOSURE / PEDESTRIAN DETOUR SIGNS

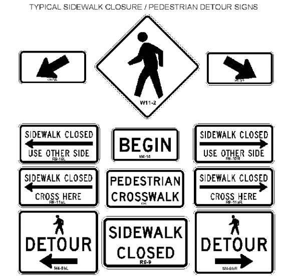

PERMIT MOT SHT 1500

MAINTENANCE OF TRAFFIC GENERAL NOTES	
CITY OF COLUMBUS, OHIO DEPARTMENT OF PUBLIC SERVICE DIVISION OF DESIGN AND CONSTRUCTION	STD DWG 1500
Preliminary	2022
rcpennington	SHEETS 1, 2 & 3

Sidewalk Closure and Pedestrian Diversion Applications

Standards: 1. When crosswalks or other pedestrian facilities are closed or relocated temporary facilities shall be detectable and shall include accessibility features consistent with the features present in the existing pedestrian facility.

Guidance: 2. Where high speeds are anticipated, a temporary traffic barrier and, if necessary, a crash cushion should be used to separate the temporary sidewalks from vehicular traffic.
3. Audible information devices should be considered where mid-block closings and changed crosswalk areas cause inadequate communication to be provided to pedestrians who have visual disabilities.

Options: a. Street lighting may be considered.
b. Only the TTC devices related to pedestrians are shown. Other devices, such as lane closure signing or ROAD WORK AHEAD signs may be used to control vehicular traffic.
c. For night time closures, Type A Flashing warning light may be used on barricades that support signs and close sidewalks.
d. Type C Steady-Burn or Type D 360-Degree Steady-Burn warning lights may be used on channelizing devices separating the temporary sidewalks from vehicular traffic flow.
e. Signs, such as KEEP RIGHT (LEFT), may be placed along a temporary sidewalk to guide or direct pedestrians.

Detour to Existing Mid-Block Crosswalk
*See Note

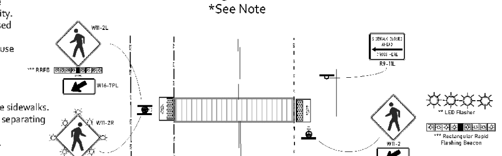

* City of Columbus, Permit MOT Review does not recommend the use of Temporary Pedestrian Crosswalks (TPC) for short term work zones. Should a TPC be required the double yellow center line and lane lines must be concealed or removed between the crosswalk lines.

Reference:
FWHA MUTCD Tables 6H-2 and 6H-3 for the meaning of the symbols and / or letter codes used in these figures.

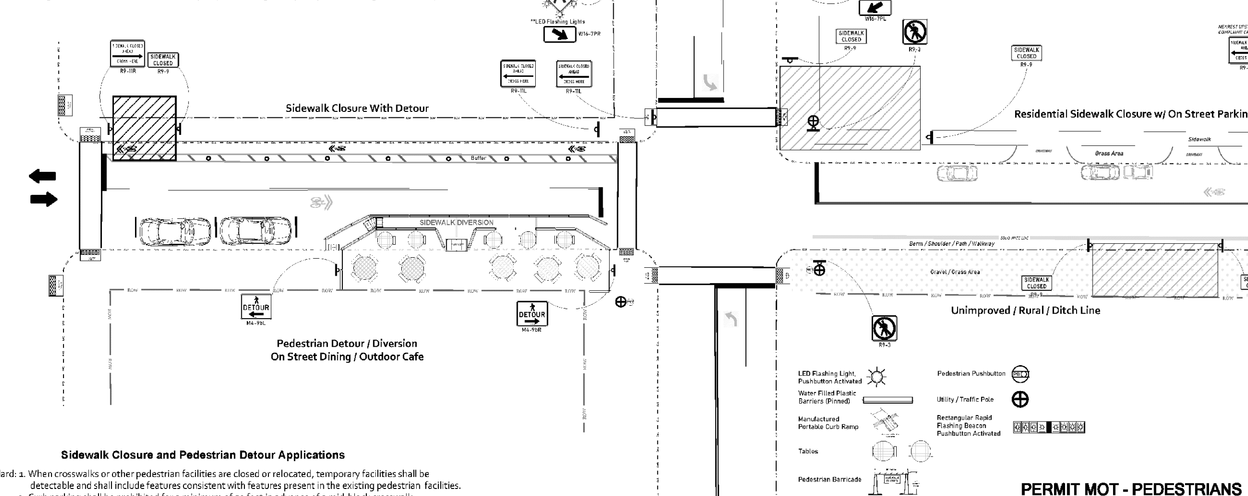

Sidewalk Closure and Pedestrian Detour Applications

Standard: 1. When crosswalks or other pedestrian facilities are closed or relocated, temporary facilities shall be detectable and shall include features consistent with features present in the existing pedestrian facilities.
2. Curb parking shall be prohibited for a minimum of 50 feet in advance of a mid-block crosswalk.

Guidance: 1. Audible information devices should be considered where mid-block closings and changed crosswalk areas cause inadequate communication to be provided to pedestrians who have visual disabilities.
2. Pedestrian traffic signal displays controlling closed crosswalks should be covered or deactivated.

Options: a. Street lighting may be considered.
b. Only TTC devices related to pedestrians are shown. Other devices, such as lane closure signing or ROAD WORK AHEAD signs may be used to control vehicular traffic.
c. Type C Steady-Burn or Type D 360-degree Steady-Burn warning lights may be used in channelizing devices separating the work area from vehicular traffic.
d. In order to maintain systematic use of florescent yellow-green background for pedestrian, bicycle and school warning signs in a jurisdiction, the fluorescent yellow-green background for pedestrian, bicycle and school warning signs may be used in TTC zones.

City of Columbus Permit MOT Policy
"Sidewalks" are defined as ANY area within the Right Of Way used by pedestrians.
SHALL NOT - Close Opposing Sidewalks or Crosswalks Simultaneously.
SHALL - Place Sidewalk Closed (R9-9) signs on each end of the Work Zone
SHALL - Place Pedestrian Detour signs at nearest ADA Compliant crosswalk beyond the Work Zone.

Sidewalk Closure, Detour & Diversion (TA-28, TA-29) are based on FHWA'S MUTCD 2023 Edition Revised for Columbus Permit MOT Plans

PERMIT MOT - PEDESTRIANS

SIDEWALK CLOSURE DETOUR & DIVERSION	
CITY OF COLUMBUS, OHIO DEPARTMENT OF PUBLIC SERVICE DIVISION OF DESIGN AND CONSTRUCTION	STD DWG 1529
Preliminary	03/06/2024
rcpennington	SHEET 1 / 1

PERMIT MOT NOTES

https://www.columbus.gov/publicservice/Design-and-Construction/Document-Library/

1. PERMIT MOT / TTC - SUBMITTAL

a.STANDARD DRAWINGS - ONLY COLUMBUS 1500-1550 WILL BE ACCEPTED FOR USE MOT / TTC ON PERMITS.

b.SITE SPECIFIC
REQUIRED - WHEN WORK ZONE IMPACTS A SIGNALIZED INTERSECTION.
REQUIRED - WHEN WORK AREA IN THE CENTRAL BUSINESS DISTRICT.
REQUIRED - WHEN REQUESTED BY MOT PERMIT REVIEW.
REQUIRED - LAW ENFORCEMENT OFFICER (LEO) AT SIGNALIZED INTERSECTIONS.

2. MASS TRANSIT AND RIDE SHARE

a.COTA BUS STOPS
SHALL CONTACT PRIOR TO START - PAUL EVANS - COTA SERVICE PROGRAM MANAGER (614) 308-4373 evanspm1@cota.com.
THIRTY DAYS - ANY CLOSURE WHICH CREATES DELAY OR DETOUR ON ASSIGNED ROUTES REQUIRES A TEMPORARY RELOCATION.
24 HOURS - PRIOR TO START OF CONSTRUCTION WITHIN 300' OF COTA ASSETS IN THE RIGHT OF WAY.
IMMEDIATELY - IN EVENT OF UNPLANNED WORK AFFECTING COTA BUS STOPS.

b.COTA ASSETS
SHALL CONTACT PRIOR TO START - PAUL EVANS - COTA SERVICE PROGRAM MANAGER (614) 308-4373 evanspm1@cota.com.
SHALL KEEP OPEN ALL STOPS & STATIONS IN WORK ZONE IF RELOCATION IS NOT REQUIRED BY COTA PROGRAM SERVICES MANAGER.

c.COGO - RIDE SHARE BIKE CHARGING STATIONS
SHALL CONTACT PRIOR TO START - CHET RIDENOUR - COGO BIKE SHARE OPERATIONS MANAGER (614) 506-8100 cridenour@lyft.com.
THIRTY DAYS - IF CLOSURE IMPACTS COGO BIKE STATION, LIMITS PUBLIC ACCESS DURING CONSTRUCTION.
24 HOURS - PRIOR TO START OF CONSTRUCTION WITHIN 300' OF COGO ASSETS.
IMMEDIATELY - IN EVENT OF UNPLANNED WORK AFFECTING COGO/LIFT ASSETS

3. BIKES AND PEDESTRIANS

a.BIKE LANE CLOSURE
WHEN A BIKE LANE PAVEMENT MARKING EXIST AND MUST BE INCLUDED IN THE MOT / TTC PLAN.
REFERENCE - MOT SHEET 1500 ADVANCE WARNING SIGNS WHEN CLOSING THE BIKE LANE AND MERGING BIKES.
REFERENCE - MOT SHEET 1500 TABLE 4 ADVANCE WARNING SIGN SPACING.
REQUIRED - ONE (1) SHARE THE ROAD SIGN MID-TAPER WHEN NO BIKE LANE BUT SHARROWS ONLY EXIST.

b.SIDEWALKS / CROSSWALKS
THE CONTRACTOR:
SHALL NOT CLOSE OPPOSING SIDEWALKS OR CROSSWALKS SIMULTANEOUSLY.
SHALL KEEP SIDEWALKS & CROSSWALKS BEYOND THE ACTIVE WORK AREA OPEN AT ALL TIMES.
SHALL PLACE R9-9 SIGNS EACH END OF THE ACTIVE WORK AREA.
SHALL PLACE R9-11 SIGNS AT THE NEAREST ADA CROSSWALKS BEYOND THE ACTIVE WORK AREA.

Note: "Sidewalks" defined ANY area within the right of way used by pedestrians.

4. PARKING

a.DRIVEWAYS
THE CONTRACTOR:
SHALL PROVIDE 72 HOURS ADVANCE NOTICE WHEN CLOSING DRIVEWAYS.
SHALL RESTORE ACCESS FOLLOWING END OF WORK THAT DAY AND MAINTAIN AREA IN COMPLIANCE WITH ADA REQUIREMENTS.
SHALL MONITOR OBSTRUCTED DRIVEWAYS AND RESPONSIBLE TO MAINTAIN ACCESS AS NEEDED.

b.ON STREET
THE CONTRACTOR:
SHALL CONTACT PARKING ENFORCEMENT (614) 645-4072 48 HOURS IN ADVANCE WHEN CLOSING METERED/APP PAY PARKING.
SHALL LIMIT PARKING RESTRICTIONS TO "AS NEEDED" TO SAFELY COMPLETE THE WORK.
SHALL PROVIDE 72 HOURS ADVANCE NOTICE TO RESIDENTS WHEN TEMPORARILY CLOSING ON STREET PARKING AREAS.
SHALL RESTORE ACCESS FOLLOWING END OF EACH WORK DAY.
SHALL MAINTAIN LANE WIDTH SUFFICIENT FOR VEHICLES TO SAFELY PASS THROUGH WORK AREA.
SHALL MONITOR AND ASSIST PERMITTED HANDICAP PARKING SPACES AS DEFINED BY THE ADA.

5. ADVANCE WARNING SIGNS

a.SIGNS, SIZES, SPACING, DISTANCE
THE CONTRACTOR:
SHALL PLACE SIGNS ON INTERSECTING STREETS WHEN NO ADVANCED WARNING SIGN IS SEEN PRIOR TO ENTERING THE WORK AREA.

b.SIZES < 40 MPH "LOW SPEED" AND 36" x 36 SHOULD BE USED.

c.SIZES > 45 MPH "HIGH SPEED" AND 48" x 48" SHOULD BE USED.

d.SPACING PER MOT SHEET 1500 TABLE 2.

e.DISTANCE VARIES WHEN TURN ONLY LANES EXIST. THE SPACE FROM STOP BAR TO TURN LANE PAVEMENT MARKINGS ORIGIN, CONTINUE PER TABLE 2.

6. TMC - SIGNAL TIMING, CAMERA MONITORING AND RECORDING

a.CITY OF COLUMBUS TMC - TRAFFIC MANAGEMENT CENTER (614) 645-7249

b.SIGNALS - TIMING CHANGES MAY BE REQUESTED BY SPECIAL DUTY LAW ENFORCEMENT OFFICER (LEO).

c.CAMERAS - MONITORING AND RECORDING MUST BE ARRANGED 72 HOURS IN ADVANCE.

7. SHOULDER CLOSURES

THE CONTRACTOR:
SHALL NOT OCCUPY, BLOCK OR IMPEDE A LANE OF TRAVEL (LOT) WHILE USING A SHOULDER CLOSURE PER 6H-3 MODIFIED
SHALL PERFORM WORK BEYOND THE EDGE OF PAVEMENT (EOP), SOLID WHITE LINE (SWL), LANE OF TRAVEL (LOT), OR BACK OF CURB (BOC).
SHALL MAINTAIN A BUFFER, SAFE DISTANCE FROM THE SWL FOR TRAFFIC CONTROL DEVICE PLACEMENT ON EOP, SWL OR LOT.
SHALL PLACE R9-9 & R9-11 SIGNS FOR SIDEWALK CLOSURE & PEDESTRIAN DETOURS PER TYPICAL 6H29 FOR PEDESTRIAN SAFETY.
SHALL SECURE PERMISSION IN ADVANCE TO PARK, STORE, STAGE & SITE ACCESS.

NOTES:
a. DEFINITIONS: Edge of Pavement (EOP), Back of Curb (BOC), Face of Curb (FOC), Solid White Line (SWL), Lane of Travel (LOT)

b. Work Zone - Equipment, Staging & Storage is prohibited within 2' of the EOP, SWL, and LOT.
Traffic Conditions - Must remain normal when deploying shoulder closures.
Separation - A 2' Buffer between the work zone and lane of travel must be maintained.
Compliance - If not in compliance with the above MOT Approval is REVOKED. Cease and Contact the MOT Supervisor immediately (614) 645-0355.

8. EASEMENTS

a.EASEMENT ACCESS WITHIN PUBLIC RIGHT OF WAY
THE CONTRACTOR:
SHALL DEPLOY TRAFFIC CONTROL WHEN STAGING, STORAGE AND ACCESSING EASEMENTS.
SHALL DEPLOY PEDESTRIAN SAFETY MEASURES.

b.NOTES - Typical 1550.1 Traffic Control Plan when Accessing Easements Follow the Guidance Above

ASBUILT CHANGES / REVISIONS

DATE	DESCRIPTIONS
—	—
—	—
—	—
—	—
—	—

OHIO Utilities Protection SERVICE
Call Before You Dig
1-800-362-2764
OR 8-1-1
CALL TWO WORKING DAYS BEFORE YOU DIG
(NON MEMBERS MUST BE CALLED DIRECTLY)

6040 COLLINGS DR.

DESIGNER: K. KHAY

everstream®
FASTER FIBER. BETTER BUSINESS.®

INFORMATION IN THIS DOCUMENT IS PROPRIETARY AND CONFIDENTIAL AND SHALL NOT BE USED, COPIED, REPRODUCED, OR DISCLOSED WITHOUT PRIOR WRITTEN CONSENT OF EVERSTREAM

PLANS PREPARED BY:
NEESAI CAD DESIGNS

Drawing Information: Facility locations are general in nature and are only intended for approximate location reference. Neesai CAD Deisgns will not be held liable for the accuracy and will not assume responsibility for any damages resulting from these drawings.

LEGEND

—E/P—	= EX. EDGE OF PAVEMENT	—OHF—	= PROP. OVERHEAD FIBER
—C/L—	= EX. CENTER LINE	—B—	= PROP. BURIED FIBER
—R/W—	= EX. RIGHT OF WAY	—P/L—	= EX. PROPERTY LINE

PROPOSED ANCHOR & GUY	PROPOSED HANDHOLE
FOREIGN/EXISTING ANCHOR & GUY	EXISTING HANDHOLE
AERIAL STORAGE LOOP	STORM DRAIN
BURIED STORAGE LOOP	FIRE HYDRANT

SCALE: NONE

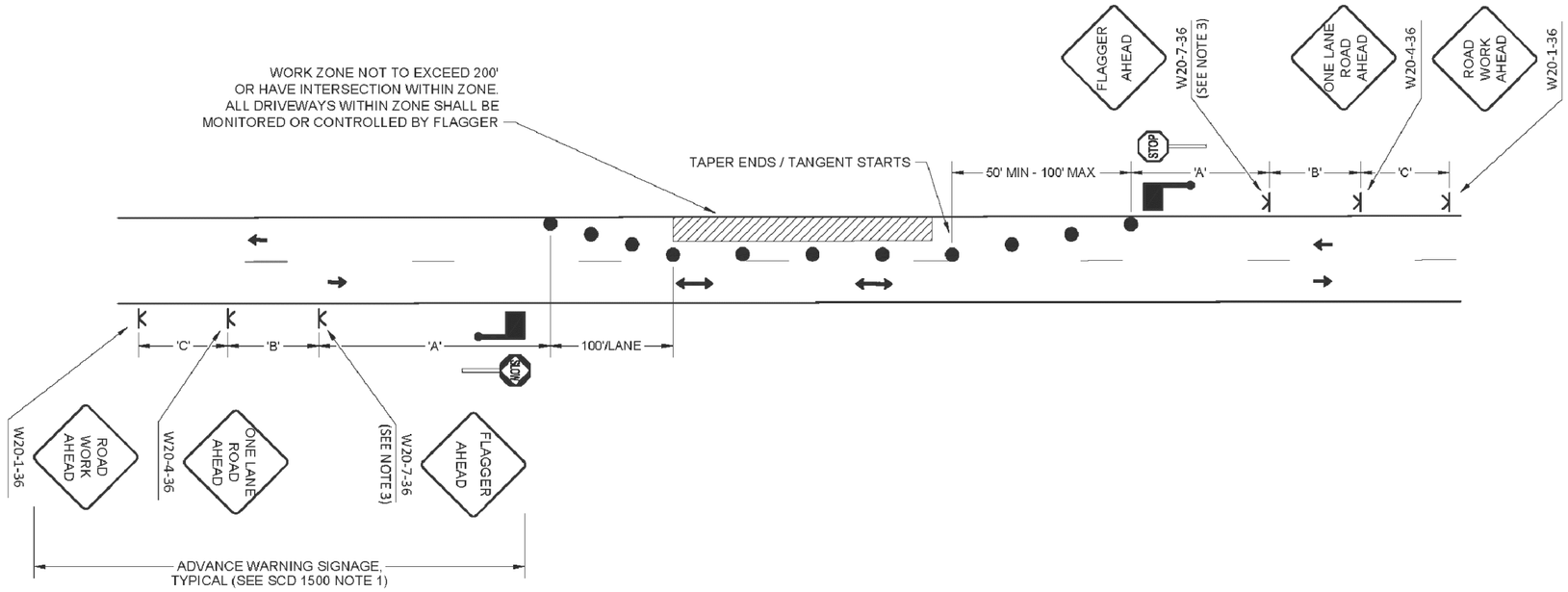

NOTES

1. FOR ADDITIONAL NOTES, TABLES, AND SYMBOL LEGEND SEE CITY OF COLUMBUS STANDARD CONSTRUCTION DRAWING 1500.
2. ON STRAIGHT ROADWAYS WITH SHORT WORK ZONES (50') IN LOW VOLUME SITUATIONS, WHERE THE FLAGGER IS VISIBLE TO ROAD USERS FROM BOTH DIRECTIONS, A SINGLE FLAGGER VISIBLY POSITIONED TO ROAD USERS APPROACHING FROM BOTH DIRECTIONS MAY BE USED.
3. NO SYMBOLS, TEXT ONLY.
4. FLAGGER USING STOP/SLOW PADDLE - SEE OMUTCD SECTION 6E.03.

TWO-WAY, ONE-LANE

FLAGGING OPERATIONS

CITY OF COLUMBUS, OHIO
DEPARTMENT OF PUBLIC SERVICE
DIVISION OF DESIGN AND CONSTRUCTION

CITY ENGINEER

STD DWG
1550
9/15/2015
SHT 1 OF 3

ASBUILT CHANGES / REVISIONS

DATE	DESCRIPTIONS
–	–
–	–
–	–
–	–
–	–
–	–

OHIO Utilities Protection SERVICE
Call Before You Dig
1-800-362-2764
OR 8-1-1
CALL TWO WORKING DAYS BEFORE YOU DIG
(NON MEMBERS MUST BE CALLED DIRECTLY)

6040 COLLINGS DR.

DESIGNER: K. KHAY

SCALE BAR = 1:80
0 40 80 120 160

everstream®
FASTER FIBER. BETTER BUSINESS.®

INFORMATION IN THIS DOCUMENT IS PROPRIETARY AND CONFIDENTIAL AND SHALL NOT BE USED, COPIED, REPRODUCED, OR DISCLOSED WITHOUT PRIOR WRITTEN CONSENT OF EVERSTREAM

PLANS PREPARED BY:
NEESAI CAD DESIGNS

Drawing Information: Facility locations are general in nature and are only intended for approximate location reference. Neesai CAD Deisgns will not be held liable for the accuracy and will not assume responsibility for any damages resulting from these drawings.

LEGEND

E/P = EX. EDGE OF PAVEMENT		OHF = PROP. OVERHEAD FIBER	
C/L = EX. CENTER LINE		B = PROP. BURIED FIBER	
R/W = EX. RIGHT OF WAY		P/L = EX. PROPERTY LINE	

PROPOSED ANCHOR & GUY	PROPOSED HANDHOLE
FOREIGN/EXISTING ANCHOR & GUY	EXISTING HANDHOLE
AERIAL STORAGE LOOP	STORM DRAIN
BURIED STORAGE LOOP	FIRE HYDRANT

SCALE: 1" = 80'

SHEET: 14 OF 22

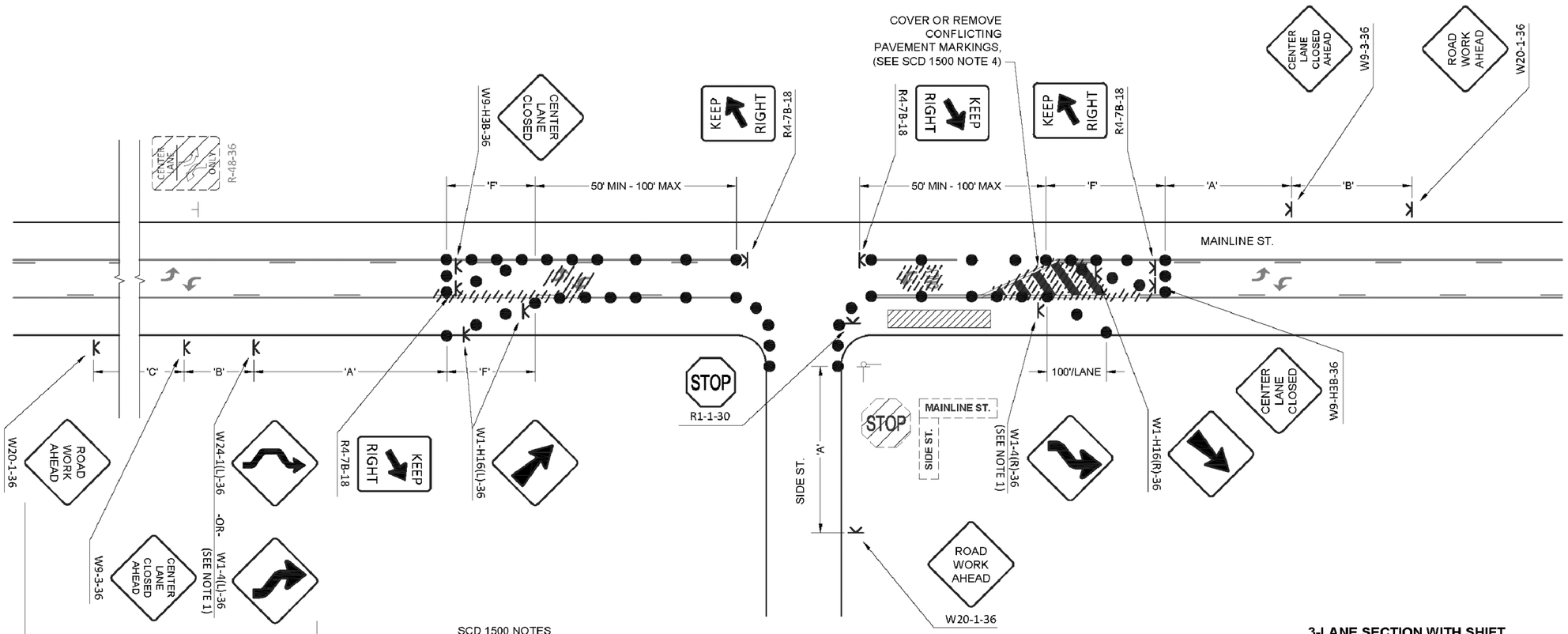

SCD 1500 NOTES

1A. SEE SCD 1500 NOTE 3. TAPER LENGTHS ARE TO BE CALCULATED USING FORMULAS FROM THE SCD 1500, TABLE 1: TAPER LENGTHS FOR TEMPORARY TRAFFIC CONTROL ZONES.

NOTES

1. IF TANGENT DISTANCE ALONG THE TEMPORARY DIVERSION IS LESS THAN 540', A DOUBLE REVERSE CURVE SIGN (W24-1) SHOULD BE USED IN PLACE OF INITIAL REVERSE CURVE SIGN AND THE SECOND REVERSE CURVE SIGN SHALL BE OMITTED.

2. FOR ADVANCE WARNING SIGN ON SIDE STREET APPLICATION PLACE SIGN A MAXIMUM OF 200' FROM STOP LINE OR TRAFFIC CONTROL.

3-LANE SECTION WITH SHIFT

LANE CLOSURES

CITY OF COLUMBUS, OHIO
DEPARTMENT OF PUBLIC SERVICE
DIVISION OF DESIGN AND CONSTRUCTION

CITY ENGINEER

STD DWG 1510

9/15/2015

SHT 3 OF 5

ASBUILT CHANGES / REVISIONS

DATE	DESCRIPTIONS
–	–
–	–
–	–
–	–
–	–

OHIO Utilities Protection SERVICE
Call Before You Dig
1-800-362-2764
OR 8-1-1
CALL TWO WORKING DAYS BEFORE YOU DIG
(NON MEMBERS MUST BE CALLED DIRECTLY)

6040 COLLINGS DR.

DESIGNER: K. KHAY

SCALE BAR = 1:80
0 40 80 120 160

everstream®
FASTER FIBER. BETTER BUSINESS.®

INFORMATION IN THIS DOCUMENT IS PROPRIETARY AND CONFIDENTIAL AND SHALL NOT BE USED, COPIED, REPRODUCED, OR DISCLOSED WITHOUT PRIOR WRITTEN CONSENT OF EVERSTREAM

PLANS PREPARED BY:
NEESAI CAD DESIGNS

Drawing Information: Facility locations are general in nature and are only intended for approximate location reference. Neesai CAD Designs will not be held liable for the accuracy and will not assume responsibility for any damages resulting from these drawings.

LEGEND

E/P	EX. EDGE OF PAVEMENT	OHF	PROP. OVERHEAD FIBER
C/L	EX. CENTER LINE	B	PROP. BURIED FIBER
R/W	EX. RIGHT OF WAY	P/L	EX. PROPERTY LINE

PROPOSED ANCHOR & GUY	PROPOSED HANDHOLE
FOREIGN/EXISTING ANCHOR & GUY	EXISTING HANDHOLE
AERIAL STORAGE LOOP	STORM DRAIN
BURIED STORAGE LOOP	FIRE HYDRANT

SCALE: 1" = 80'

SHEET: 15 OF 22

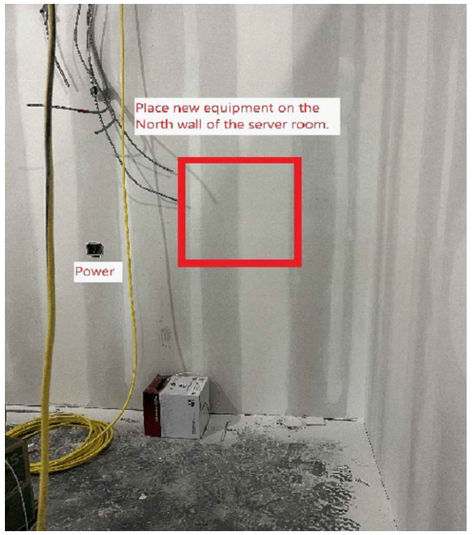

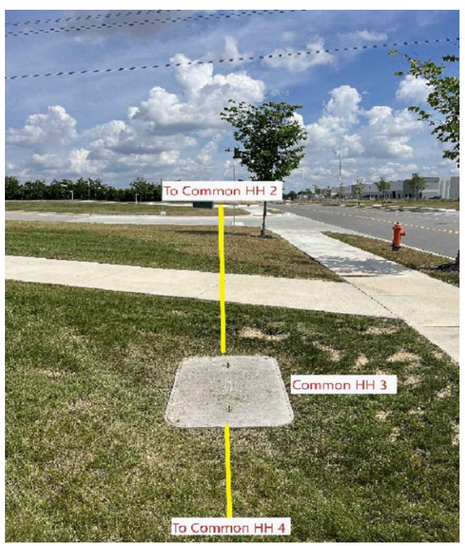

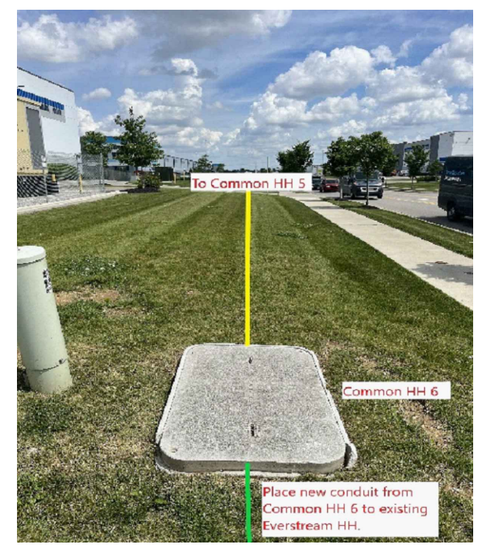

ASBUILT CHANGES / REVISIONS

DATE	DESCRIPTIONS
–	–
–	–
–	–
–	–
–	–

OHIO Utilities Protection SERVICE
Call Before You Dig
1-800-362-2764
OR 8-1-1
CALL TWO WORKING DAYS BEFORE YOU DIG
(NON MEMBERS MUST BE CALLED DIRECTLY)

6040 COLLINGS DR.

DESIGNER: K. KHAY

SCALE BAR = 1:80
0 40 80 120 160

everstream®
FASTER FIBER. BETTER BUSINESS.®

INFORMATION IN THIS DOCUMENT IS PROPRIETARY AND CONFIDENTIAL AND SHALL NOT BE USED, COPIED, REPRODUCED, OR DISCLOSED WITHOUT PRIOR WRITTEN CONSENT OF EVERSTREAM

PLANS PREPARED BY:
NEESAI CAD DESIGNS

Drawing Information: Facility locations are general in nature and are only intended for approximate location reference. Neesai CAD Designs will not be held liable for the accuracy and will not assume responsibility for any damages resulting from these drawings.

LEGEND

E/P = EX. EDGE OF PAVEMENT		OHF = PROP. OVERHEAD FIBER	
C/L = EX. CENTER LINE		B = PROP. BURIED FIBER	
R/W = EX. RIGHT OF WAY		P/L = EX. PROPERTY LINE	

PROPOSED ANCHOR & GUY	PROPOSED HANDHOLE
FOREIGN/EXISTING ANCHOR & GUY	EXISTING HANDHOLE
AERIAL STORAGE LOOP	STORM DRAIN
BURIED STORAGE LOOP	FIRE HYDRANT

SCALE: 1" = 80'

SHEET: 16 OF 22

4' x 4' x 4' FIBERGLASS MANHOLE DETAILS

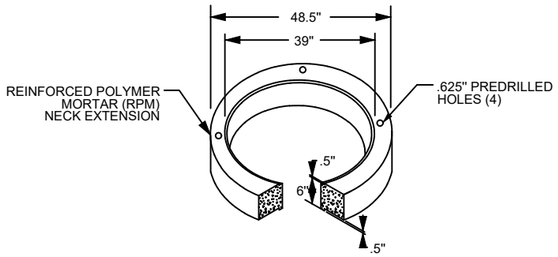

TYPICAL DETAIL - A
NECK EXTENSION

NOTES:
1. EACH COVER TO HAVE (4) PICK SLOTS FOR REMOVING.
2. STAMP "CAPROCK" IN COVER.
3. ACCESS HOLE: 30".

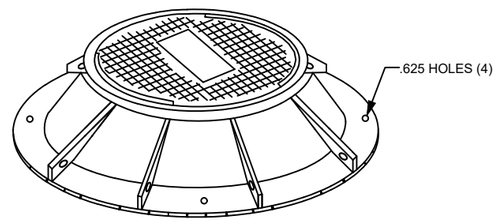

TYPICAL DETAIL - B
MANHOLE COVER
WESTERN IRONWORKS #B=30

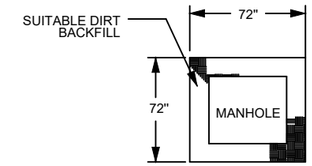

TYPICAL DETAIL - C
EXCAVATION PIT
PLAN VIEW

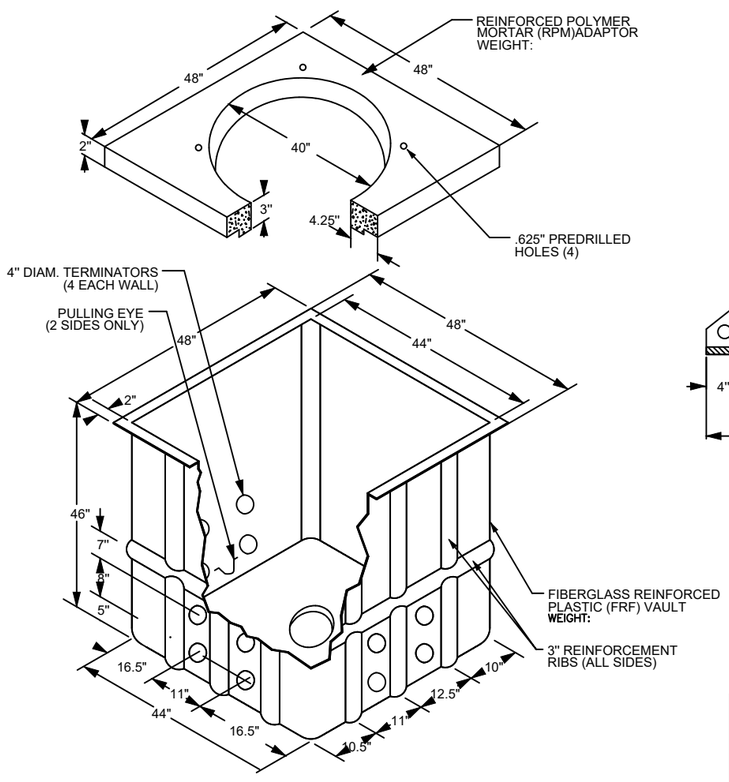

TYPICAL DETAIL - D
MANHOLE ADAPTOR

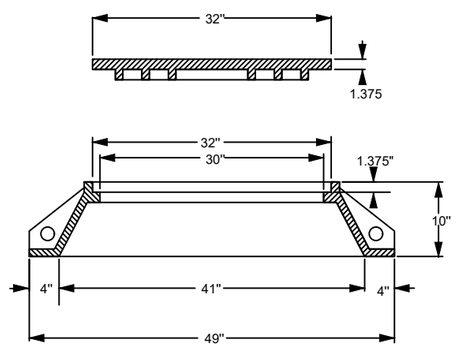

TYPICAL DETAIL - E
RING & COVER DETAIL
RING: 390lbs. COVER: 300lbs.

NOTES:
1. VOID IN EXCAVATED AREAS TO BE BACKFILLED WITH SELECT MATERIAL.
2. BOTTOM OF EXCAVATED PIT TO BE BACKFILLED WITH 12" OF CRUSHED STONE (3/4" GRADE).
3. SHORING WILL BE REQUIRED.
4. ALL MANHOLES SHALL BE PLACED WITH COVER FLUSH WITH EXISTING GRADE.

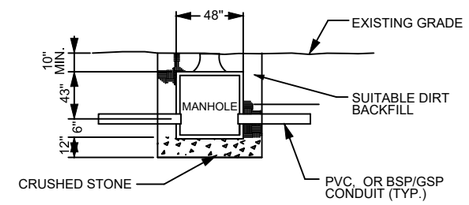

TYPICAL DETAIL - F
EXCAVATION PIT
PROFILE VIEW

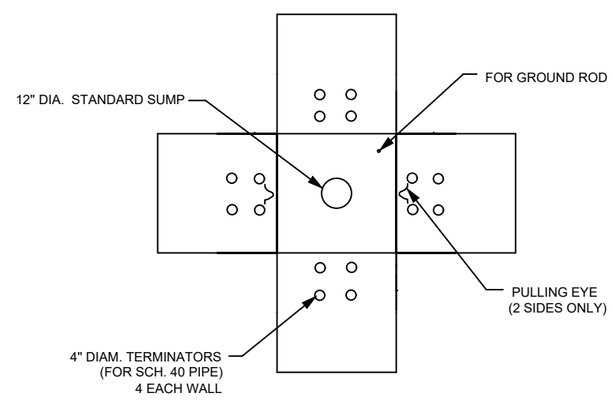

TYPICAL DETAIL - G
4' x 4' x 4' MANHOLE
PLAN VIEW

ASBUILT CHANGES / REVISIONS

DATE	DESCRIPTIONS
–	–
–	–
–	–
–	–
–	–

OHIO Utilities Protection SERVICE
Call Before You Dig
1-800-362-2764
OR 8-1-1
CALL TWO WORKING DAYS BEFORE YOU DIG
(NON MEMBERS MUST BE CALLED DIRECTLY)

6040 COLLINGS DR.

DESIGNER: K. KHAY

everstream®
FASTER FIBER. BETTER BUSINESS.®

INFORMATION IN THIS DOCUMENT IS PROPRIETARY AND CONFIDENTIAL AND SHALL NOT BE USED, COPIED, REPRODUCED, OR DISCLOSED WITHOUT PRIOR WRITTEN CONSENT OF EVERSTREAM

PLANS PREPARED BY:
NEESAI CAD DESIGNS

Drawing Information: Facility locations are general in nature and are only intended for approximate location reference. Neesai CAD Deisgns will not be held liable for the accuracy and will not assume responsibility for any damages resulting from these drawings.

LEGEND

E/P = EX. EDGE OF PAVEMENT	OHF = PROP. OVERHEAD FIBER	PROPOSED ANCHOR & GUY	PROPOSED HANDHOLE
C/L = EX. CENTER LINE	B = PROP. BURIED FIBER	FOREIGN/EXISTING ANCHOR & GUY	EXISTING HANDHOLE
R/W = EX. RIGHT OF WAY	P/L = EX. PROPERTY LINE	AERIAL STORAGE LOOP	STORM DRAIN
		BURIED STORAGE LOOP	FIRE HYDRANT

SCALE: NONE

SHEET: 17 OF 22

4' x 4' x 4' POLYMER CONCRETE MANHOLE DETAILS

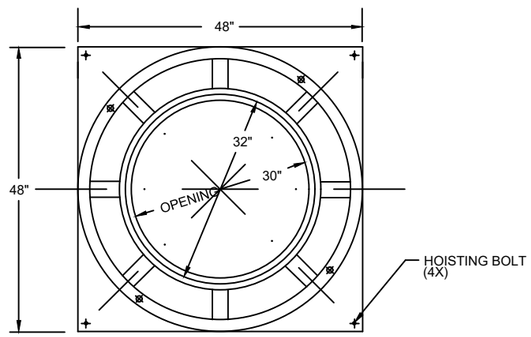

TYPICAL DETAIL - A

MANHOLE TOP VIEW

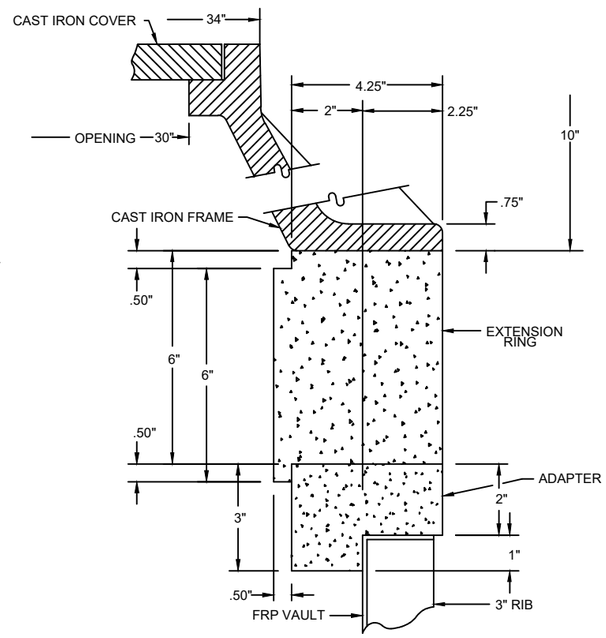

TYPICAL DETAIL - B

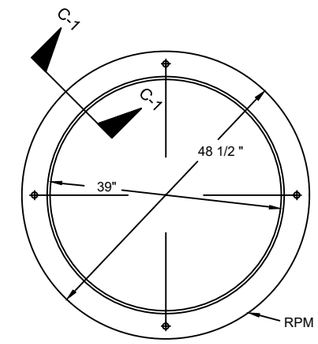

TYPICAL DETAIL - C

EXTENSION RING

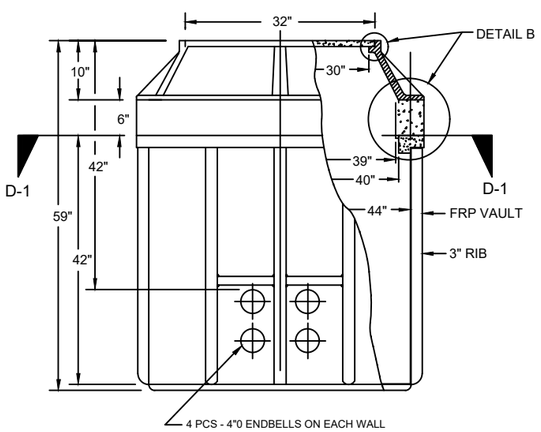

TYPICAL DETAIL - D

MANHOLE FRONT VIEW

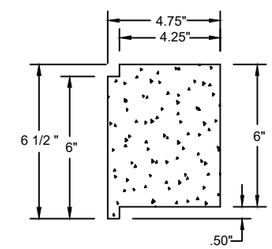

TYPICAL DETAIL - C-1

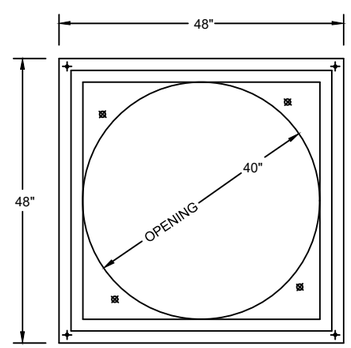

TYPICAL DETAIL - D-1

ADAPTER TOP VIEW

NOTES:

1. USE ARMORCASE POLYMER CONCRETE MANHOLE OR EQUIVALENT.

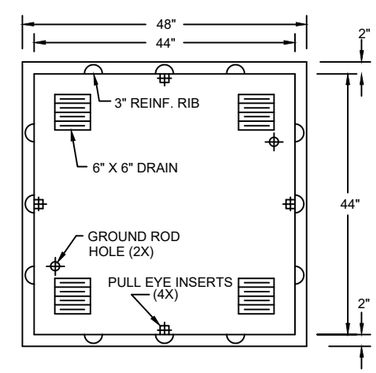

TYPICAL DETAIL - E

VAULT TOP VIEW

ASBUILT CHANGES / REVISIONS

DATE	DESCRIPTIONS
–	–
–	–
–	–
–	–
–	–
–	–

OHIO Utilities Protection SERVICE

Call Before You Dig

1-800-362-2764

OR 8-1-1

CALL TWO WORKING DAYS BEFORE YOU DIG (NON MEMBERS MUST BE CALLED DIRECTLY)

6040 COLLINGS DR.

DESIGNER: K. KHAY

everstream®

FASTER FIBER. BETTER BUSINESS.®

INFORMATION IN THIS DOCUMENT IS PROPRIETARY AND CONFIDENTIAL AND SHALL NOT BE USED, COPIED, REPRODUCED, OR DISCLOSED WITHOUT PRIOR WRITTEN CONSENT OF EVERSTREAM

PLANS PREPARED BY:

NEESAI CAD DESIGNS

Drawing Information: Facility locations are general in nature and are only intended for approximate location reference. Neesai CAD Deisgns will not be held liable for the accuracy and will not assume responsibility for any damages resulting from these drawings.

LEGEND

E/P = EX. EDGE OF PAVEMENT	OHF = PROP. OVERHEAD FIBER	PROPOSED ANCHOR & GUY	PROPOSED HANDHOLE
C/L = EX. CENTER LINE	B = PROP. BURIED FIBER	FOREIGN/EXISTING ANCHOR & GUY	EXISTING HANDHOLE
R/W = EX. RIGHT OF WAY	P/L = EX. PROPERTY LINE	AERIAL STORAGE LOOP	STORM DRAIN
		BURIED STORAGE LOOP	FIRE HYDRANT

SCALE: NONE

SHEET: 18 OF 22

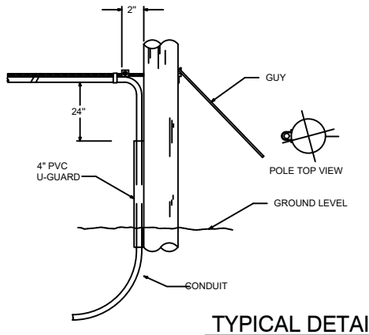

NOTES:

1. EXTEND U-GUARD MIN. 6" BELOW GROUND LEVEL
2. FOR CONDUIT PL. U-GUARD BELOW SURFACE TO CONDUIT ADAPTER.
3. USE STEEL CONDUIT OR U-GUARD FROM BOTTOM OF POLE UP 10'.

TYPICAL DETAIL - A

POLE ARRANGEMENT FOR AERIAL TO BURIED CABLE

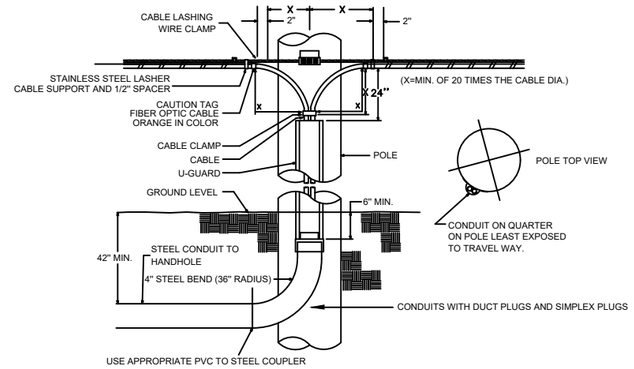

TYPICAL DETAIL - B

POLE ARRANGEMENT FOR REPEATER
OR HANDHOLE LOCATION

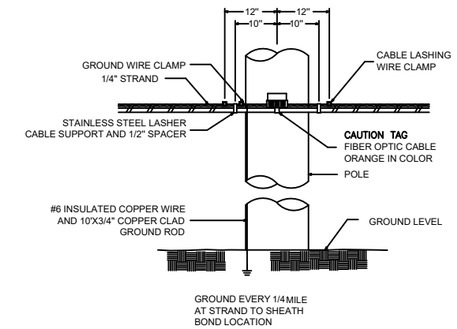

TYPICAL DETAIL - C

TYPICAL CABLE & HARDWARE INSTALLATION
(1/4" STRAND)

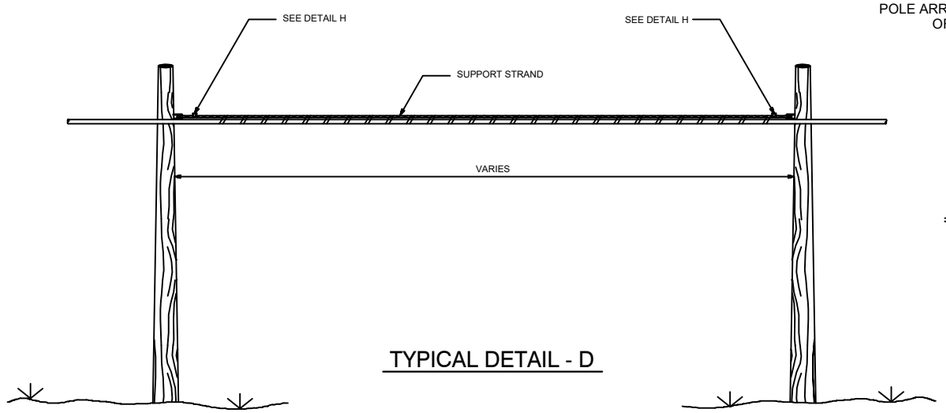

TYPICAL DETAIL - D

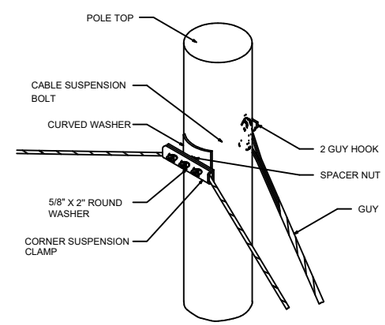

TYPICAL DETAIL - E

SUSPENSION STRAND - PULL AWAY
FROM POLE - 5 FEET OR MORE

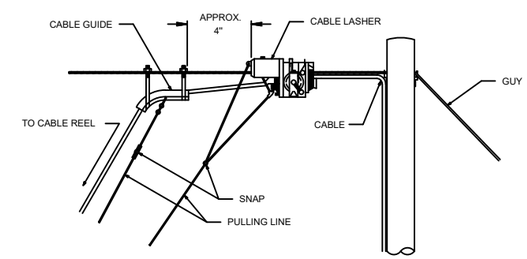

TYPICAL DETAIL - F

TYPICAL ARRANGEMENT OF
CABLE LASHER AND CABLE GUIDE

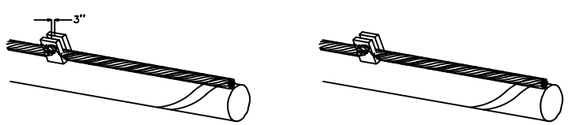

REMOVE ANY SLACK IN THE LASHING WIRE BY MAINTAINING A PULL ON THE WIRE AND TAPPING THE STRAND SHARPLY. THEN FORM THE WIRE OVER THE STUD AND TIGHTEN THE NUT. CUT THE FREE END OF THE LASHING WIRE OFF 3/4" BEYOND THE END OF THE CLAMP.

FORMING WIRE OVER STUD OF CLAMP

FORM THE LASHING WIRE AROUND THE STRAND AND PLACE IT BELOW THE STUD AND BETWEEN THE SECOND WASHER AND STUD SHOULDER.

FORMING LASHING WIRE AROUND STRAND

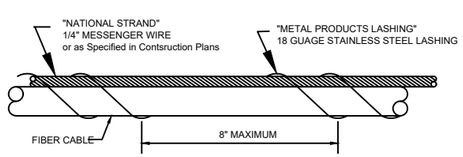

TYPICAL DETAIL - G

JOINING 045 LASHING WIRE

C LASHING WIRE GRIP INSTALLED ON STRAND

D CABLE LASHING CLAMP

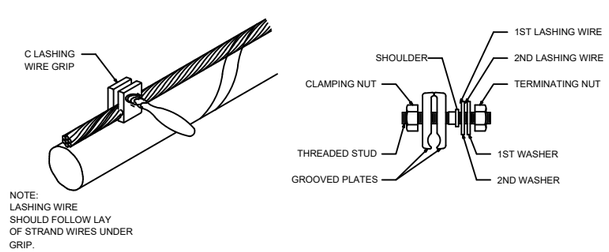

NOTE:
LASHING WIRE
SHOULD FOLLOW LAY
OF STRAND WIRES UNDER
GRIP.

TYPICAL DETAIL - H

LASHING WIRE GRIP AND CLAMP

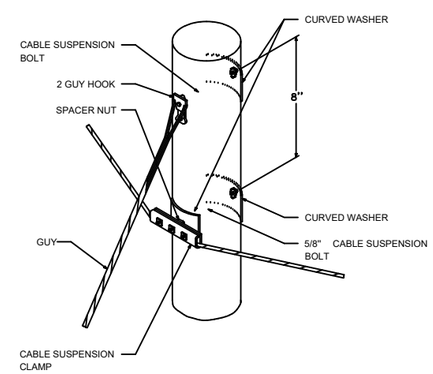

TYPICAL DETAIL - I

SUSPENSION STRAND - PULL TOWARD
POLE - LESS THAN 5 FEET

ASBUILT CHANGES / REVISIONS

DATE	DESCRIPTIONS
–	–
–	–
–	–
–	–
–	–
–	–
–	–

OHIO Utilities Protection SERVICE
Call Before You Dig
1-800-362-2764
OR 8-1-1
CALL TWO WORKING DAYS BEFORE YOU DIG
(NON MEMBERS MUST BE CALLED DIRECTLY)

6040 COLLINGS DR.

DESIGNER: K. KHAY

everstream®
FASTER FIBER. BETTER BUSINESS.®

INFORMATION IN THIS DOCUMENT IS PROPRIETARY AND CONFIDENTIAL AND SHALL NOT BE USED, COPIED, REPRODUCED, OR DISCLOSED WITHOUT PRIOR WRITTEN CONSENT OF EVERSTREAM

PLANS PREPARED BY:
NEESAI CAD DESIGNS

Drawing Information: Facility locations are general in nature and are only intended for approximate location reference. Neesai CAD Deisgns will not be held liable for the accuracy and will not assume responsibility for any damages resulting from these drawings.

LEGEND

E/P	= EX. EDGE OF PAVEMENT	OHF	= PROP. OVERHEAD FIBER		PROPOSED ANCHOR & GUY		PROPOSED HANDHOLE
C/L	= EX. CENTER LINE	B	= PROP. BURIED FIBER		FOREIGN/EXISTING ANCHOR & GUY		EXISTING HANDHOLE
R/W	= EX. RIGHT OF WAY	P/L	= EX. PROPERTY LINE		AERIAL STORAGE LOOP		STORM DRAIN
					BURIED STORAGE LOOP		FIRE HYDRANT

SCALE: NONE

SHEET: 19 OF 22

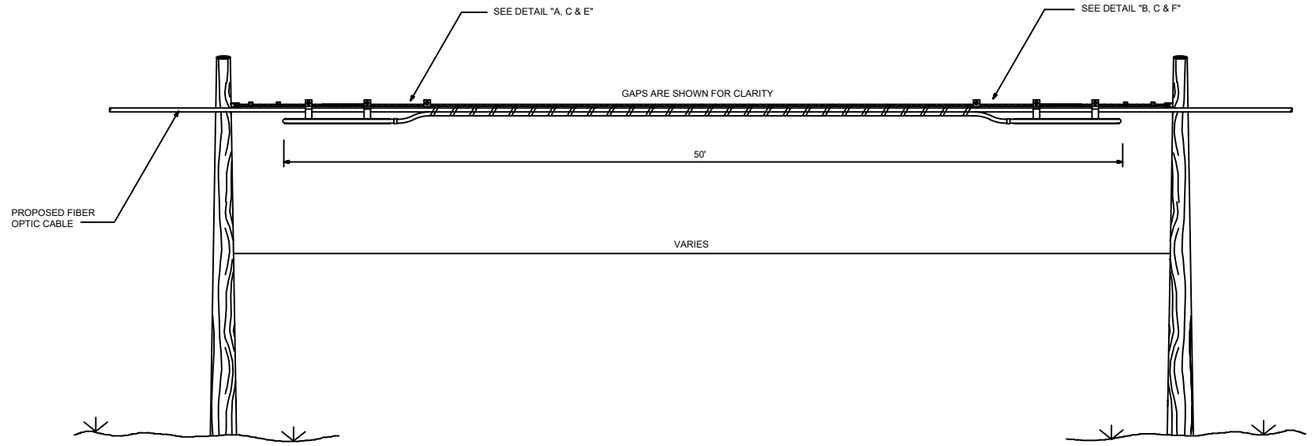

TYPICAL DETAIL FOR STORING CABLE SLACK

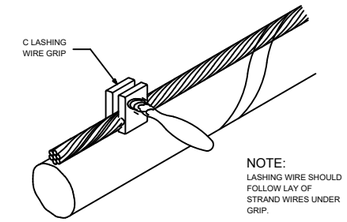

TYPICAL DETAIL - C

LASHING WIRE GRIP AND CLAMP
C LASHING WIRE GRIP INSTALLED ON STRAND

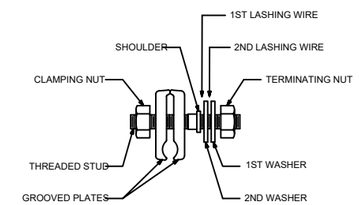

TYPICAL DETAIL - D

CABLE LASHING CLAMP

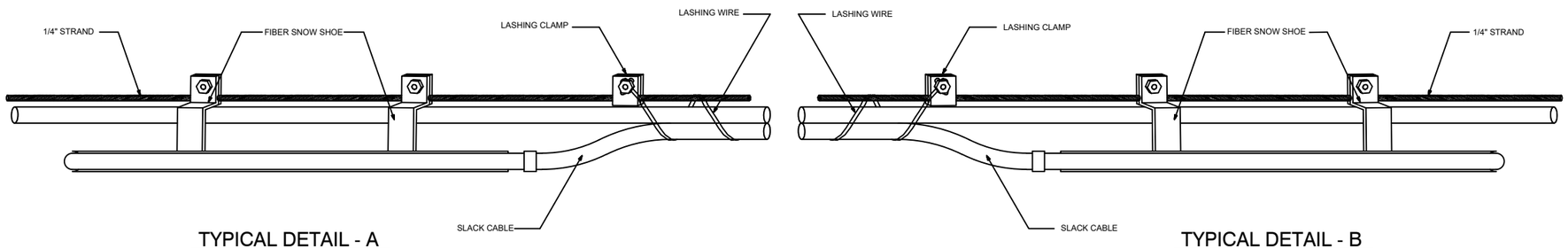

TYPICAL DETAIL - A

TYPICAL DETAIL - B

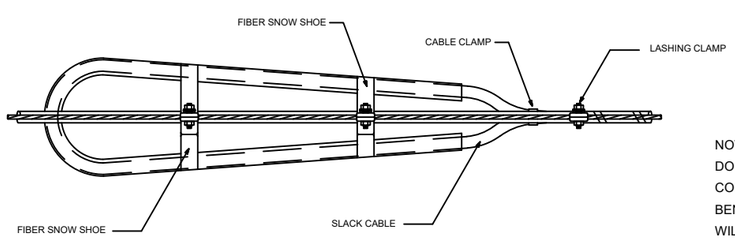

TYPICAL DETAIL - E

NOTE:
DO NOT EXCEED THE MANUFACTURERS SPECIFICATIONS CONCERNING MINIMUM BENDING RADIUS. THE MINIMUM BENDING RADIUS OF FIBER OPTIC CABLE UNDER TENSION WILL NOT EXCEED 20 TIMES THE CABLE DIAMETER.

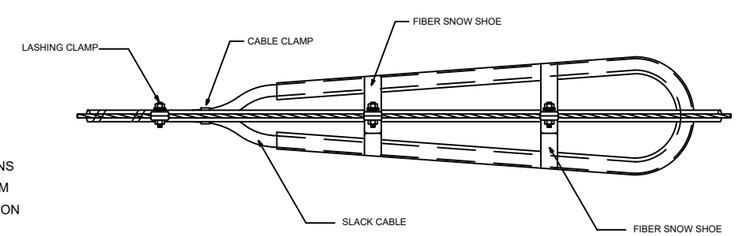

TYPICAL DETAIL - F

ASBUILT CHANGES / REVISIONS

DATE	DESCRIPTIONS
–	–
–	–
–	–
–	–
–	–

OHIO Utilities Protection SERVICE
Call Before You Dig
1-800-362-2764
OR 8-1-1
CALL TWO WORKING DAYS BEFORE YOU DIG
(NON MEMBERS MUST BE CALLED DIRECTLY)

6040 COLLINGS DR.

DESIGNER: K. KHAY

everstream®
FASTER FIBER. BETTER BUSINESS.®

INFORMATION IN THIS DOCUMENT IS PROPRIETARY AND CONFIDENTIAL AND SHALL NOT BE USED, COPIED, REPRODUCED, OR DISCLOSED WITHOUT PRIOR WRITTEN CONSENT OF EVERSTREAM

PLANS PREPARED BY:
NEESAI CAD DESIGNS

Drawing Information: Facility locations are general in nature and are only intended for approximate location reference. Neesai CAD Deisgns will not be held liable for the accuracy and will not assume responsibility for any damages resulting from these drawings.

LEGEND

E/P = EX. EDGE OF PAVEMENT		OHF = PROP. OVERHEAD FIBER	
C/L = EX. CENTER LINE		B = PROP. BURIED FIBER	
R/W = EX. RIGHT OF WAY		P/L = EX. PROPERTY LINE	

PROPOSED ANCHOR & GUY	PROPOSED HANDHOLE
FOREIGN/EXISTING ANCHOR & GUY	EXISTING HANDHOLE
AERIAL STORAGE LOOP	STORM DRAIN
BURIED STORAGE LOOP	FIRE HYDRANT

SCALE: NONE

SHEET: 20 OF 22

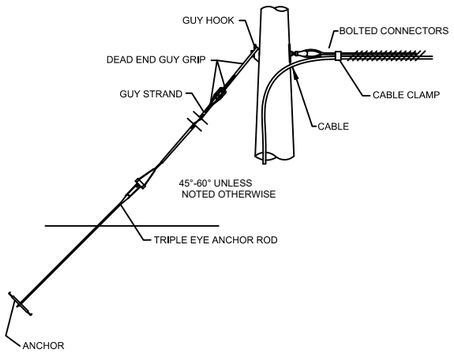

TYPICAL DEAD END DOWNGUY DETAIL
NTS

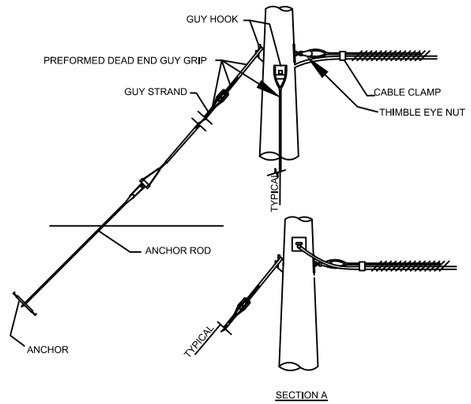

TYPICAL COMMON CORNER DOWNGUY DETAIL
NTS

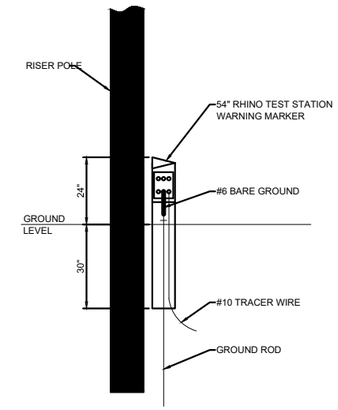

TRACER WIRE GROUNDING WITH RHINO TEST STATION
NTS

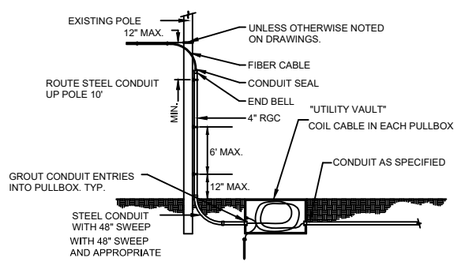

TYPICAL AERIAL TO UNDERGROUND DETAIL
NTS

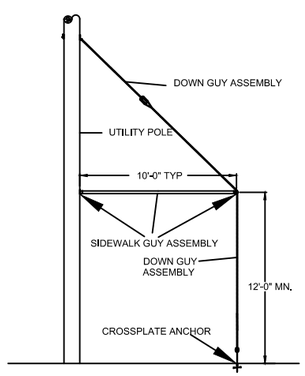

TYPICAL SIDEWALK GUY DETAIL
NTS

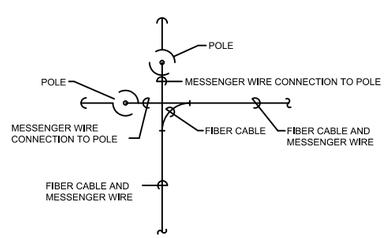

CORNER/DEAD END POLE DOWN GUY
NTS

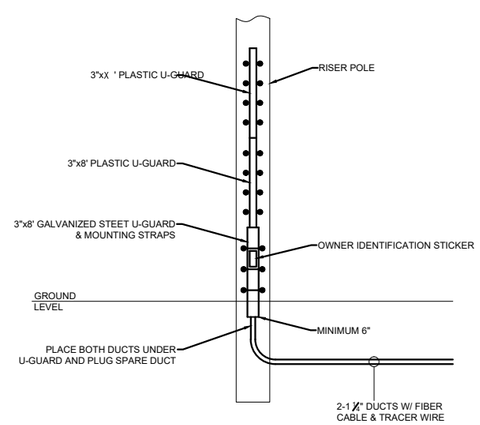

RISER GUARD INSTALLATION
NTS

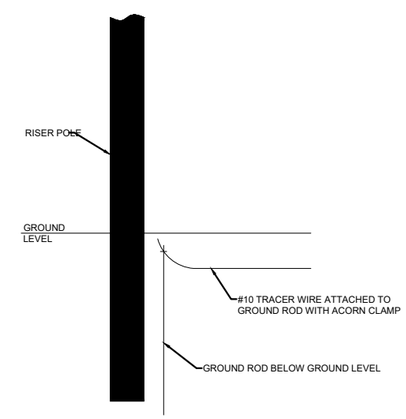

TRACER WIRE GROUNDING AT RISER POLE
NTS

ASBUILT CHANGES / REVISIONS

DATE	DESCRIPTIONS
—	—
—	—
—	—
—	—
—	—

OHIO Utilities Protection SERVICE
Call Before You Dig
1-800-362-2764
OR 8-1-1
CALL TWO WORKING DAYS BEFORE YOU DIG
(NON MEMBERS MUST BE CALLED DIRECTLY)

6040 COLLINGS DR.

DESIGNER: K. KHAY

everstream®
FASTER FIBER. BETTER BUSINESS.®

INFORMATION IN THIS DOCUMENT IS PROPRIETARY AND CONFIDENTIAL AND SHALL NOT BE USED, COPIED, REPRODUCED, OR DISCLOSED WITHOUT PRIOR WRITTEN CONSENT OF EVERSTREAM

PLANS PREPARED BY:
NEESAI CAD DESIGNS

Drawing Information: Facility locations are general in nature and are only intended for approximate location reference. Neesai CAD Deisgns will not be held liable for the accuracy and will not assume responsibility for any damages resulting from these drawings.

LEGEND

E/P	= EX. EDGE OF PAVEMENT	OHF	= PROP. OVERHEAD FIBER		PROPOSED ANCHOR & GUY		PROPOSED HANDHOLE
C/L	= EX. CENTER LINE	B	= PROP. BURIED FIBER		FOREIGN/EXISTING ANCHOR & GUY		EXISTING HANDHOLE
R/W	= EX. RIGHT OF WAY	P/L	= EX. PROPERTY LINE		AERIAL STORAGE LOOP		STORM DRAIN
					BURIED STORAGE LOOP		FIRE HYDRANT

SCALE: NONE

SHEET: 21 OF 22

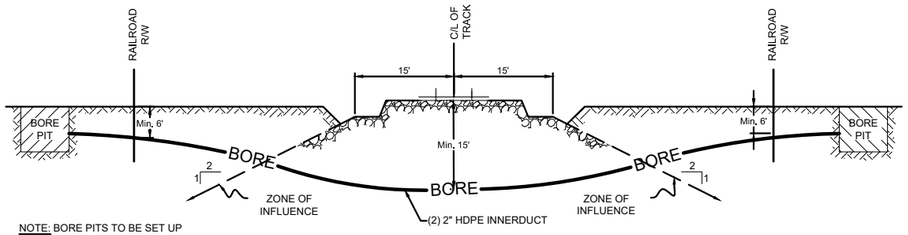

NOTE: BORE PITS TO BE SET UP OUTSIDE RAILROAD RIGHT OF WAY.

RAILROAD CROSSING DETAIL
NTS

***CONTRACTOR MUST REFERENCE AND INSTALL DUCT PER APPROVED RAILROAD PERMIT PLAN AND PROFILE AT RAILROAD ENCROACHMENT CROSSING.**

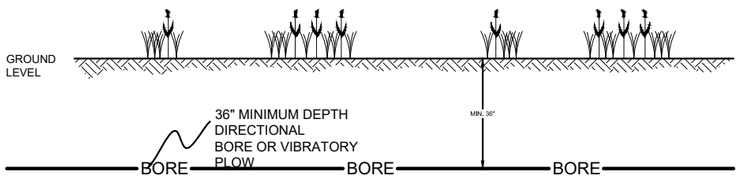

TYPICAL WETLAND CROSSING
NTS

NOTE: BORE PITS TO BE SET UP OUTSIDE OF WETLAND BOUNDARIES UNLESS OTHERWISE NOTED ON PRINTS.

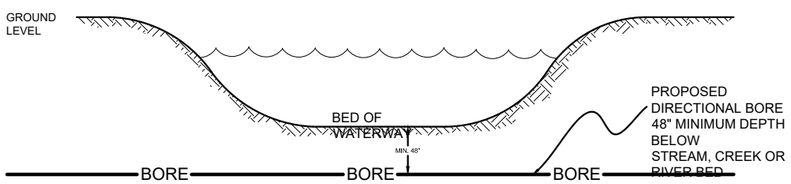

TYPICAL WATERWAY CROSSING
NTS

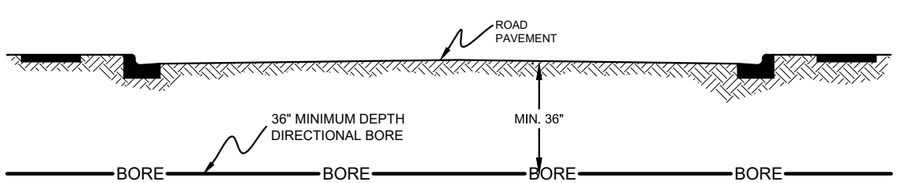

TYPICAL ROADWAY CROSSING
NTS

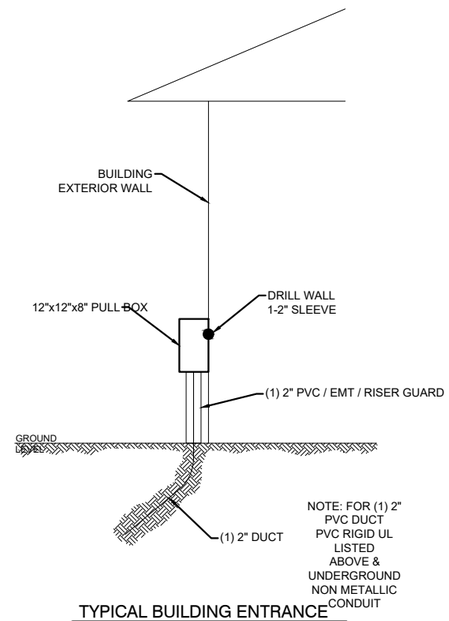

TYPICAL BUILDING ENTRANCE
NTS

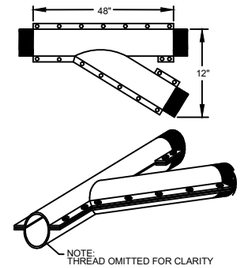

SPLIT BSP FLANGED WYE
NTS

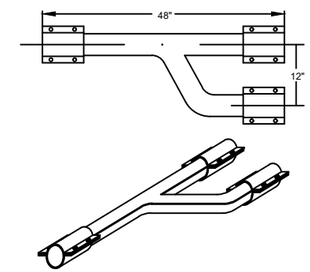

SPLIT BSP BRANCH WYE W/ COUPLINGS
NTS

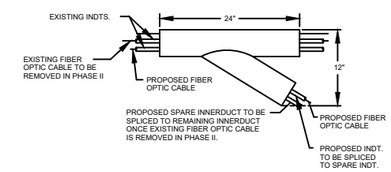

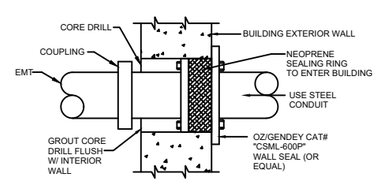

CONDUIT SEAL DETAIL
NTS

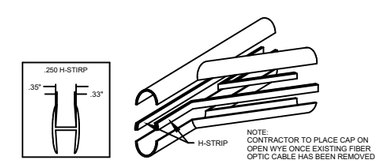

SPLIT PVC BRANCH WYE W/ H-STRIP
NTS

ASBUILT CHANGES / REVISIONS

DATE	DESCRIPTIONS
—	—
—	—
—	—
—	—
—	—

OHIO Utilities Protection SERVICE
Call Before You Dig
1-800-362-2764
OR 8-1-1
CALL TWO WORKING DAYS BEFORE YOU DIG (NON MEMBERS MUST BE CALLED DIRECTLY)

6040 COLLINGS DR.

DESIGNER: K. KHAY

everstream®
FASTER FIBER. BETTER BUSINESS.®

INFORMATION IN THIS DOCUMENT IS PROPRIETARY AND CONFIDENTIAL AND SHALL NOT BE USED, COPIED, REPRODUCED, OR DISCLOSED WITHOUT PRIOR WRITTEN CONSENT OF EVERSTREAM

PLANS PREPARED BY:
NEESAI CAD DESIGNS

Drawing Information: Facility locations are general in nature and are only intended for approximate location reference. Neesai CAD Deisgns will not be held liable for the accuracy and will not assume responsibility for any damages resulting from these drawings.

LEGEND

E/P = EX. EDGE OF PAVEMENT		OHF = PROP. OVERHEAD FIBER	
C/L = EX. CENTER LINE		B = PROP. BURIED FIBER	
R/W = EX. RIGHT OF WAY		P/L = EX. PROPERTY LINE	
PROPOSED ANCHOR & GUY		PROPOSED HANDHOLE	
FOREIGN/EXISTING ANCHOR & GUY		EXISTING HANDHOLE	
AERIAL STORAGE LOOP		STORM DRAIN	
BURIED STORAGE LOOP		FIRE HYDRANT	

SCALE: NONE

SHEET: 22 OF 22

EVERSTREAM
SITE ADDRESS: 6040 COLLINGS DR.
LOCKBOURNE, OH 43137
SITE ID: EV-ETHS-ON-134874
ES IMP TICKET: IMP 134874
(SOF-134874)

TOTAL FOC RATE CARD			
	UNITS	ESTIMATED QUANTITY	ACTUAL QUANTITY
FOC AERIAL	FT	0	0
FOC BURIED	FT	4205	0
1-2" HDPE	FT	472	0
HANDHOLE 24"X36"X40"	EACH	0	0
EMT	FT	0	0

CONSTRUCTION NOTES

1. LEAVE 30' COILED AT TERMINATION POINT.
2. LEAVE 75' COILED IN EACH VAULT.
3. LEAVE 150' OF SLACK FOR EVERY 1500' OF LASHED CABLE IN RURAL AREAS, 120' OF SLACK FOR EVERY 1000' OF LASHED CABLE IN URBAN AREAS.
4. BORE A NEW 48F 500' FROM EXISTING EVERSTREAM HH AT THE FRONT OF 1345 LONDON GROVEPORT RD WEST ON LONDON GROVEPORT RD AND THEN NORTH ON COLLINGS DR TO COMMON HH 6.
5. PULL 2898' OF NEW 48F NORTH ON COLLINGS DR FROM COMMON HH 6 TO COMMON HH 2. PULL 735' OF NEW 48F FROM COMMON HH 2 EAST ON THE ACCESS RD TO COMMON HH 1. PULL 705' OF NEW 48F NORTH FROM HH 1 INTO THE SERVER ROOM AND PLACE NEW FIBER AND EQUIPMENT ON THE NORTH WALL.
6. CONTRACTOR SHALL REPLACE ALL DRIVEWAYS, SIDEWALKS, OR OTHER DISTURB SURFACES TO A CONDITION EQUAL TO OR BETTER THAN THE PRIOR EXISTING CONDITIONS.
7. CONTRACTOR SHALL MAINTAIN ACCESS TO ALL ADJACENT PROPERTIES DURING CONSTRUCTION OPERATIONS.
8. CONTRACTOR SHALL BE RESPONSIBLE FOR VERIFYING AND LOCATING ALL SERVICES PRIOR TO BEGINNING ANY EXCAVATION.
9. CONTRACTOR SHALL MAINTAIN A MINIMUM OF 3' HORIZONTAL AND 1' VERTICAL CLEARANCE FROM ALL WATER AND SEWER LINES.

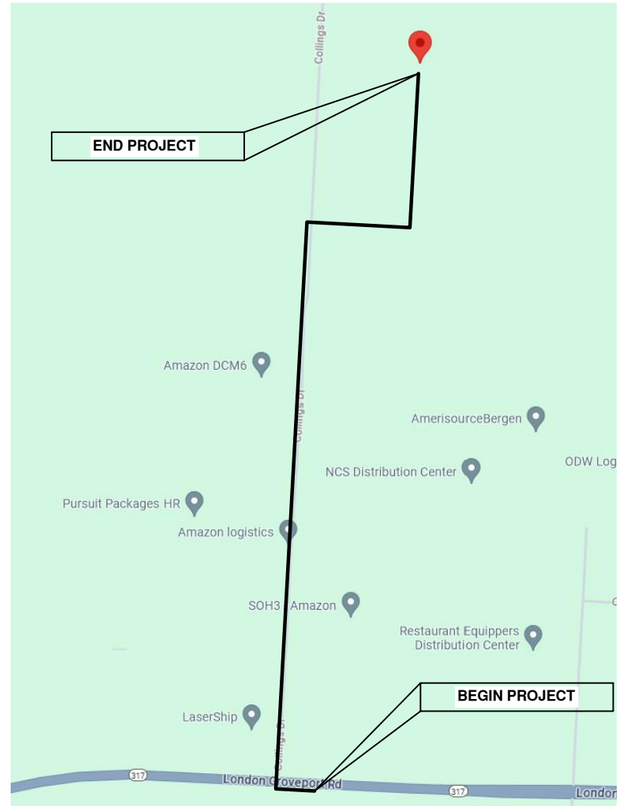

SHEET INDEX:

SHEET 1.....SITE MAP & NOTES
SHEET 2.....GENERAL NOTES
SHEET 3–4.....TRAFFIC CONTROL NOTES
SHEET 5–12.....PLAN & PROFILE
SHEET 13–15.....MOT
SHEET 16.....PHOTOS
SHEET 17–22.....DETAILS

CONTACT INFORMATION

EVERSTREAM
JOHN STEVENS
380-209-5936

N

ASBUILT CHANGES / REVISIONS

DATE	DESCRIPTIONS
–	–
–	–
–	–
–	–
–	–

OHIO Utilities Protection SERVICE
Call Before You Dig
1-800-362-2764
OR 8-1-1
CALL TWO WORKING DAYS BEFORE YOU DIG
(NON MEMBERS MUST BE CALLED DIRECTLY)

6040 COLLINGS DR.

DESIGNER: K. KHAY

everstream®
FASTER FIBER. BETTER BUSINESS.®

INFORMATION IN THIS DOCUMENT IS PROPRIETARY AND CONFIDENTIAL AND SHALL NOT BE USED, COPIED, REPRODUCED, OR DISCLOSED WITHOUT PRIOR WRITTEN CONSENT OF EVERSTREAM

PLANS PREPARED BY:
NEESAI CAD DESIGNS

Drawing Information: Facility locations are general in nature and are only intended for approximate location reference. Neesai CAD Deisgns will not be held liable for the accuracy and will not assume responsibility for any damages resulting from these drawings.

LEGEND

E/P = EX. EDGE OF PAVEMENT		OHF = PROP. OVERHEAD FIBER	
C/L = EX. CENTER LINE		B = PROP. BURIED FIBER	
R/W = EX. RIGHT OF WAY		P/L = EX. PROPERTY LINE	

PROPOSED ANCHOR & GUY	PROPOSED HANDHOLE
FOREIGN/EXISTING ANCHOR & GUY	EXISTING HANDHOLE
AERIAL STORAGE LOOP	STORM DRAIN
BURIED STORAGE LOOP	FIRE HYDRANT

SCALE: NONE

SHEET: 1 OF 22

GENERAL NOTES FOR THE DIVISION OF SEWERS AND DRAINS:

UTILITY LOCATORS WILL ONLY LOCATE AND MARK MAINLINE SEWERS, AFTER AN OH-811 LOCATE REQUEST IS PLACED. THE CONTRACTOR IS RESPONSIBLE FOR FIELD VERIFYING THE LOCATION OF ALL MAIN LINE SEWERS AND LOCATING ALL PRIVATE SEWER SERVICE LATERALS. THE CONTRACTOR WILL BE HELD RESPONSIBLE FOR ANY DAMAGES TO SEWER MAINS AND/OR SERVICE LATERALS CAUSED DURING CONSTRUCTION. ALL REPAIRS TO THE SEWER LINES AND/OR SERVICE LATERALS MUST BE COMPLETED BY A CITY OF COLUMBUS LICENSED SEWER CONTRACTOR UNDER A SEPARATE SEWER PERMIT.

THE CONTRACTOR MUST MAINTAIN A 3' HORIZONTAL & 1' VERTICAL CLEARANCE FROM THE O.D. OF ALL SEWERS AND APPURTENANCES TO THE NEAREST EDGE OF THE FACILITY BEING PLACED. FOR BRICK SEWERS MAINTAIN 10' HORIZONTAL & 5' VERTICAL CLEARANCE FROM O.D. TO NEAREST EDGE OF PROPOSED FACILITY.

SEE SPECIFIC NOTE FOR PROPOSED SEWERS

PAVEMENT CUTTING, SAWING AND EXCAVATION OPERATIONS NOTE:

ALL PUBLIC AGENCIES AND PRIVATE CONTRACTORS PERFORMING PAVEMENT-CUTTING OPERATIONS ON CITY OF COLUMBUS STREETS AND ROADWAYS SHALL PROTECT THE ENVIRONMENT FROM DISCHARGES CREATED BY THEIR PAVEMENT CUTTING OPERATIONS. NOTE THAT COLUMBUS CITY CODE 1145 PROHIBITS NON-STORM WATER DISCHARGE INTO THE CITY OF COLUMBUS SEWER SYSTEM, CURB INLETS AND ANY PART OF ITS MS4 (MUNICIPAL SEPARATE STORM SEWER SYSTEM).

THE REQUIREMENT INCLUDES BUT IS NOT LIMITED TO WET OR DRY SAW-CUTTING, JACK HAMMERING, EXCAVATION EQUIPMENT USE, ETC. THE PUBLIC AGENCY AND/OR PRIVATE CONTRACTOR WORK CREWS SHALL RECOVER AND DISPOSE OF DEBRIS, POLLUTED WATERS, OR SUCH DISCHARGES RESULTING FROM THEIR PAVEMENT CUTTING OPERATIONS AND PROTECT ALL STORM SEWER INLETS FROM RECEIVING ANY DISCHARGES FROM THE CONSTRUCTION OPERATIONS. THE AGENCY OR CONTRACTOR RESPONSIBLE FOR EACH PAVEMENT CUTTING ACTIVITY SHALL BE SOLELY LIABLE FOR NOTICE OF VIOLATIONS (NOV/S) AND FINES ISSUED BY CITY OF COLUMBUS AND/OR STATE OF OHIO AUTHORITIES.

EQUIPMENT, MATERIALS AND METHODS SHALL BE PROVIDED BY THE RESPONSIBLE PUBLIC AGENCY AND/OR PRIVATE CONTRACTOR TO WORK CREWS PERFORMING THE PAVEMENT CUTTING ACTIVITY AND MADE AVAILABLE TO WORK CREWS FOR USE IN CLEANING UP DISCHARGES RESULTING FROM SUCH CUTTING ACTIVITIES AND PREVENTING RUNOFF. ALL WORK CREWS SHALL BE TRAINED TO EXERCISE AND EMPLOY EQUIPMENT, MATERIALS, AND ENVIRONMENTAL PROTECTIVE MEASURES TO PREVENT POLLUTED DISCHARGES FROM ENTERING THE CITY OF COLUMBUS STORM SEWER SYSTEM AND WATERS OF THE STATE OF OHIO.
THE PUBLIC AGENCY AND/OR PRIVATE CONTRACTORS ARE SOLELY RESPONSIBLE FOR ENSURING THAT THE INLET PROTECTION IS ADEQUATE. THE MOST STRINGENT PROJECT PLANS, NOTES AND/OR DRAWINGS INCLUDING STORM WATER POLLUTION PREVENTION PLAN (SWP3) OR SPILL PREVENTION/REMEDIATION PLAN SHALL APPLY TO ALL PAVEMENT CUTTING, SAWING OR EXCAVATION OPERATIONS.

IN CASE OF EMERGENCY CONTACT:
CITY OF COLUMBUS DIVISION OF SEWERAGE & DRAINAGE
1250 FAIRWOOD AVENUE, COLUMBUS, OHIO 43206
PHONE: 614-645-7102 (SMOC 24/7 DISPATCH LINE)

FOR THE DIVISION OF POWER

THE DIVISION OF POWER (DOP) MAY HAVE UNDERGROUND OR OVERHEAD PRIMARY POWER, SECONDARY POWER, CONDUIT SYSTEMS AND STREET LIGHTING AT THIS WORK LOCATION. THE CONTRACTOR IS HEREBY REQUIRED TO CONTACT OHIO 811 AT 811 OR 1-800-362-2764 FORTY-EIGHT (48) HOURS PRIOR TO CONDUCTING ANY ACTIVITY WITHIN THE CONSTRUCTION AREA.

ANY REQUIRED RELOCATION, SUPPORT, PROTECTION, OR ANY OTHER ACTIVITY CONCERNED WITH THE CITY'S ELECTRICAL FACILITIES IN THE CONSTRUCTION AREA IS TO BE PERFORMED BY THE CONTRACTOR UNDER THE DIRECTION OF DOP PERSONNEL AT THE EXPENSE OF THE PROJECT. DOP SHALL MAKE ALL FINAL CONNECTIONS TO DOP'S EXISTING ELECTRICAL SYSTEM AT THE EXPENSE OF THE PROJECT. THE CONTRACTOR SHALL USE MATERIAL AND MAKE REPAIRS TO A CITY OF COLUMBUS STREET LIGHTING SYSTEM BY FOLLOWING DOP'S "MATERIAL AND INSTALLATION SPECIFICATIONS (MIS) AND THE CITY OF COLUMBUS "CONSTRUCTION AND MATERIALS SPECIFICATIONS (CMSC). ANY NEW OR RE- INSTALLED UNDERGROUND STREETLIGHT SYSTEM SHALL REQUIRE TESTING AS REFERRED TO IN SECTION 1001.18 OF THE CMSC MANUAL. THE CONTRACTOR SHALL CONFORM TO DOP'S EXISTING STREET LIGHTING LOCKOUT/TAGOUT (LOTO) PROCEDURE, MIS-01, COPIES OF WHICH ARE AVAILABLE FORM DOP

IF ANY ELECTRIC FACILITY BELONGING TO DOP IS DAMAGED IN ANY MANNER BY THE CONTRACTOR, ITS AGENTS, SERVANTS, OR EMPLOYEES, AND REQUIRES EMERGENCY REPAIRS, THE DOP DISPATCH OFFICE SHOULD BE CONTACTED IMMEDIATELY AT (614) 645-7627. DOP SHALL MAKE ALL NECESSARY REPAIRS, AND THE EXPENSE OF SUCH REPAIRS AND OTHER RELATED COSTS SHALL BE PAID BY THE CONTRACTOR TO THE DIVISION OF POWER, CITY OF COLUMBUS, OHIO.

IN CASE OF EMERGENCY CONTACT:
DIVISION OF POWER
910 DUBLIN ROAD, COLUMBUS, OHIO 43215
PHONE: 614-645-7788

WATER NOTES:

EXPOSE WATER LINE AT CROSSING(S) TO VERIFY DEPTH AND LOCATIONPRIOR TO AND DURING ANY DIRECTIONAL BORING.

THE CONTRACTOR IS RESPONSIBLE FOR LOCATED ALL CUSTOMERS OWNED SERVICE LINES. THE CONTRACTOR SHALL FIELD VERIFY THE HORIZONTAL AND VERTICAL LOCATION OF ANY CITY OR CUSTOMER OWNED MAIN OR SERVICE LINE THAT MAY BE AFFECTED BY THE PROPOSED CONSTRUCTION ACTIVITIES. FIELD VERIFICATION SHALL TAKE PLACE PRIOR TO AN ACTIVITY THAT MAY JEOPARDIZE THE INTEGRITY OF THE FACILITY AND AT A LOCATION NEAREST THE POINT OF POSSIBLE CONFLICT.

ANY REPAIR TO CITY OR CUSTOMER OWNED WATER LINES ARE THE RESPONSIBILITY OF THE CONTRACTOR. THE CONTRACTOR SHALL CONTACT THE CITY OF COLUMBUS, DIVISION OF WATER AT 614-645-7788 PRIOR TO ANY REPAIRS ON CITY OWNED WATER FACILITIES. THE CONTRACTOR MUST BE A CITY OF COLUMBUS LICENSED WATER CONTRACTOR. THE CONTRACTOR SHALL MAINTAIN A MINIMUM OF 3' HORIZONTAL AND 1' VERTICAL CLEARANCE FROM THE OUTSIDE DIAMETER OF ALL WATER LINES AT 8' FROM ANY "TEE" CONNECTION, BANDS, AND ENDS OF THE WATER LINES, FROM OUTSIDE DIAMETER TO THE NEAREST EDGE OF THE FACILITY BEING PLACED.

IF DURING EXCAVATION, THE POLYETHYLENE ENCASEMENT OF THE EXISTING WATER MAIN BECOMES DAMAGED, THE CONTRACTOR SHALL REPAIR THE POLYETHYLENE ENCASEMENT PER MANUFACTURE'S SPECIFICATIONS AND DOW STANDARD DRAWINGS L-1003 AND L-1004, AT THEIR OWN EXPENSE. ENSURE THAT THE ENTIRE EXPOSED AREA SHALL BE COVERED WITH NEW POLYETHYLENE ENCASEMENT AND SECURELY TAPED, PRIOR TO BACKFILL.

IF THE ALIGNMENT OF THE PROPOSED INFRASTRUCTURE IS CROSSING OR IS PARALLEL (WITHIN IN 5-FEET) OF A 20-INCH OR LARGER PRESTRESSED CONCRETE CYLINDER PIPE (PCCP), THE FOLLOWING NOTE MUST BE INCLUDED ON THE PLAN SUBMITTED FOR WATER REVIEW:

PRIOR TO INSTALLATION OF THE PROPOSED INFRASTRUCTURE THAT IS TO CROSS OR IS PARALLEL (WITHIN IN 5-FEET) OF THE IDENTIFIED PRESTRESSED CONCRETE CYLINDER PIPE (PCCP), THE CONTRACTOR SHALL EXPOSE THE EXISTING PCCP WATER MAIN. THE PCCP WATER MAIN SHALL BE EXPOSED SUFFICIENTLY ENOUGH TO VERIFY THAT NO DAMAGE WILL OCCUR DURING INSTALLATION OF PROPOSED INFRASTRUCTURE.

WHEN PARALLELING, THE EXISTING PCCP WATER MAIN SHALL BE EXPOSED AT THE BEGINNING, END AND EVERY 100-FEET THROUGH THE PROPOSED INFRASTRUCTURE ALIGNMENT. WHEN CROSSING, THE EXISTING PCCP WATER MAIN SHALL BE EXPOSED WHERE THE PROPOSED INFRASTRUCTURE CROSSES THE EXISTING PCCP WATER MAIN.

A CITY INSPECTOR WILL BE REQUIRED TO BE ON-SITE TO WITNESS THE EXCAVATION OF THE EXISTING PCCP WATER MAIN. THE CONTRACTOR IS TO CONTACT THE DPS DIVISION OF DESIGN & CONSTRUCTION AT 614-645-0433 TO SCHEDULE THE INSPECTION.

IF A LEAD OR GALVANIZED WATER SERVICE LINE IS ENCOUNTERED AND NOT DAMAGED, THE CONTRACTOR SHALL REPORT THE PRESENCE OF THE TAP VIA EMAIL TO WATERQUALITY@COLUMBUS.GOV. INCLUDE THE SITE'S ADDRESS AND A PHOTO OF THE TAP IN THE EMAIL. IF THE SERVICE IS DAMAGED, IMMEDIATELY CONTACT THE DIVISION OF WATER DISTRIBUTION ENGINEERING OFFICE AT 614-645-7677 TO REQUEST THE SHUT OFF OF THE EXISTING CURB STOP.

DIVISION OF FORESTRY

TREES MAY EXIST IN THE ROW IN VARIOUS LOCATIONS ALONG THIS PROJECT. ALL EXCAVATIONS, OPEN TRENCHES, OR BORE PITS LOCATED WITHIN 15 FEET OF THE TRUNK OF A TREE WILL REQUIRE INSPECTION PRIOR TO BACKFILLING. CALL FORESTRY AT 614/645-5238 TO SCHEDULE ALL INSPECTIONS. EXCAVATIONS NEAR TREES THAT ARE BACKFILLED PRIOR TO INSPECTION WILL RESULT IN THE TREE AND STUMP NEEDING TO BE REMOVED AT THE EXPENSE OF THE PERMIT HOLDER SINCE PROPER INSPECTION OF ANY ROOT DAMAGE WOULD NO LONGER BE POSSIBLE.

APPLICANT MUST CONTACT THE CITY'S DIVISION OF FORESTRY (614-645-6648) PRIOR TO ANY IMPACT TO ANY PUBLIC VEGETATION, THIS INCLUDES THE CUTTING OF TREE ROOTS AND BRANCHES, BUSHES, OR LANDSCAPE AREA WITHIN THE CITY'S PUBLIC RIGHTS-OF-WAY. PUBLIC TREES WILL BE PROTECTED AGAINST INJURY OF DAMAGE TO BRANCHES, TRUNKS OR ROOTS FROM CONSTRUCTION AND EXCAVATION CONSTRUCTION MATERIALS AND EXCAVATION DERBIES, CHEMICALS, FUEL, EQUIPMENT OR VEHICLES, ARE NOT TO BE STOCKPILED, STORED, THE DRIP-LINE OF PUBLIC TREES. FAILURE TO CONTACT THE CITY FORESTER WILL RESULT IN THE APPLICANT REIMBURSING THE DIVISION FOR THE COST DETERMINED BY THE CURRENT EDITION OF THE "GUIDE FOR PLANT APPRAISAL" PUBLISHED BY INTERNATIONAL SOCIETY OF AGRICULTURE.

FOR THE CITY OF COLUMBUS - DEPARTMENT OF TECHNOLOGY

COC-DOT MAY HAVE OVERHEAD AND UNDERGROUND FIBER CABLES EXISTING AT THIS WORK SITE. ANY REQUIRED RELOCATION, SUPPORT, PROTECTION, OR ANY OTHER ACTIVITY CONCERNED WITH COC-DOT'S CABLES, CONDUITS, MANHOLES, HAND HOLES, PULL BOXES, PAD MOUNT CABINETS OR OTHER FACILITIES AND/OR MATERIALS IN THE CONSTRUCTION AREA IS TO BE PERFORMED BY THE CONTRACTOR UNDER THE DIRECTION OF COC-DOT PERSONAL AND AT THE EXPENSE OF THE PROJECT. THE CONTRACTOR SHALL USE MATERIALS AND MAKE REPAIRS TO A COC-DOT'S SYSTEM BY FOLLOWING THE COC-DOT MATERIAL AND INSTALLATION SPECIFICATIONS IN I-NET'S GENERAL SPECIFICATIONS DOCUMENT, HEREAFTER REFERRED TO SIMPLY AS THE "IGSD". ANY RE-INSTALLED FIBER SHALL REQUIRE TESTING AS REFERRED TO IN IGSD. THE CONTRACTOR SHALL BE CITY OF COLUMBUS APPROVED FOR FIBER SPLICING PLUS MEET IGSD REQUIREMENTS. IF ANY CABLE FACILITY BELONGING TO THE COC-DOT IS DAMAGED IN ANY MANNER BY THE CONTRACTOR, HIS AGENTS, SERVANTS OR EMPLOYEES, THAT WOULD REQUIRE EMERGENCY REPAIRS, THE COC-DOT MAINTENANCE CONTRACTOR SHALL MAKE ALL NECESSARY REPAIRS, AND THE EXPENSE OF SUCH REPAIRS AND OTHER RELATED COSTS SHALL BE PAID BY THE CONTRACTOR TO THE DIVISION OF TECHNOLOGY CITY OF COLUMBUS. NOTE: ANY WORK PERFORMED OR MATERIALS INSTALLED BY THE CONTRACTOR THAT HAS NOT BEEN APPROVED BY COC-DOT PERSONAL OR HAS BEEN CONSTRUCTED OUTSIDE OF THE REQUIREMENTS OF THE IGSD WILL BE REPLACED OR REBUILT AT THE CONTRACTORS EXPENSE. CONTACT (614) 645-7756 COC-DOT FIBER PHYSICAL PERSONAL FOR QUESTIONS.

ASBUILT CHANGES / REVISIONS

DATE	DESCRIPTIONS
–	–
–	–
–	–
–	–
–	–

OHIO Utilities Protection SERVICE
Call Before You Dig
1-800-362-2764
OR 8-1-1
CALL TWO WORKING DAYS BEFORE YOU DIG
(NON MEMBERS MUST BE CALLED DIRECTLY)

6040 COLLINGS DR.

DESIGNER: K. KHAY

everstream®
FASTER FIBER. BETTER BUSINESS.®

INFORMATION IN THIS DOCUMENT IS PROPRIETARY AND CONFIDENTIAL AND SHALL NOT BE USED, COPIED, REPRODUCED, OR DISCLOSED WITHOUT PRIOR WRITTEN CONSENT OF EVERSTREAM

PLANS PREPARED BY:
NEESAI CAD DESIGNS
Drawing Information: Facility locations are general in nature and are only intended for approximate location reference. Neesai CAD Deisgns will not be held liable for the accuracy and will not assume responsibility for any damages resulting from these drawings.

LEGEND

E/P	= EX. EDGE OF PAVEMENT	OHF	= PROP. OVERHEAD FIBER		PROPOSED ANCHOR & GUY		PROPOSED HANDHOLE
C/L	= EX. CENTER LINE	B	= PROP. BURIED FIBER		FOREIGN/EXISTING ANCHOR & GUY		EXISTING HANDHOLE
R/W	= EX. RIGHT OF WAY	P/L	= EX. PROPERTY LINE		AERIAL STORAGE LOOP		STORM DRAIN
					BURIED STORAGE LOOP		FIRE HYDRANT

SCALE: NONE

SHEET: 2 OF 22

CITY OF COLUMBUS
DEPARTMENT OF PUBLIC SERVICE

TEMPORARY TRAFFIC CONTROL (NOTES REQUIRED ON ALL PROJECTS)

1. ALL TEMPORARY TRAFFIC CONTROL (TTC) DEVICES SHALL BE FURNISHED, ERECTED, MAINTAINED AND REMOVED BY THE CONTRACTOR IN ACCORDANCE WITH THE OHIO MANUAL OF UNIFORM TRAFFIC CONTROL DEVICES FOR STREETS AND HIGHWAYS (CURRENT EDITION). COPIES ARE AVAILABLE FROM THE OHIO DEPARTMENT OF TRANSPORTATION, OFFICE OF CONTRACTS, 1980 WEST BROAD STREET, COLUMBUS, OHIO 43223. NOTE: ALL DEVICES SHALL COMPLY, FOR CONDITION AND LOCATION, WITH THE CURRENT EDITION OF THE NCHRP 350 AND MASH CRASH TESTING GUIDELINES.

2. CONSTRUCTION OPERATIONS SHALL NOT BEGIN UNTIL ALL TRAFFIC CONTROL IS IN PLACE AND APPROVED BY THE DEPARTMENT OF PUBLIC SERVICE INSPECTOR. IF THE CONTRACTOR DOES NOT COMPLY WITH THE STANDARDS, INCLUDING THE INSTALLATION OF TEMPORARY PAVEMENT MARKINGS AND THE REMOVAL OF CONFLICTING TRAFFIC CONTROLS, THEIR PERMIT SHALL BE REVOKED AND ALL WORK SHALL BE TERMINATED. TEMPORARY PAVEMENT MARKINGS TO INCLUDE, BUT NOT LIMITED TO, CHANNELIZING LINES, EDGE LINES, AND CENTERLINES SHALL BE INSTALLED AND MAINTAINED ON ALL CONSTRUCTION OPERATIONS LASTING A MINIMUM OF 14 CALENDAR DAYS OR AS DIRECTED BY THE TEMPORARY TRAFFIC CONTROL COORDINATOR OR THE PROJECT ENGINEER.

3. THE CONTRACTOR SHALL GIVE ADVANCE NOTIFICATION (WRITTEN AND VERBALLY) TO THE TEMPORARY TRAFFIC CONTROL COORDINATOR AT 614-645-0355 OR 614-645-5845 & THE DIVISION OF REFUSE COLLECTION'S OPERATION MANAGER AT 614-645-1675, WRITTEN NOTIFICATION TO PAVING THE WAY AT PAVINGTHEWAY@MORPC.ORG OR VERBAL TO 614-233-4200, PROJECT ENGINEER, AND THE SENIOR SERVICE PLANNER OF COTA AT 614-308-4373 OR FAX 614-275-5933, INFORMING THEM OF ALL UPCOMING MAINTENANCE OF TRAFFIC CHANGES ON A WEEKLY BASIS. NOTIFICATION SHALL INCLUDE, BUT NOT BE LIMITED TO, WHAT, WHERE, WHEN, AND HOW PEDESTRIAN AND VEHICULAR TRAFFIC WILL BE AFFECTED, AND THE TEMPORARY TRAFFIC CONTROL PROCEDURES THE CONTRACTOR IS PLANNING TO USE. THE TYPE OF TRAFFIC CHANGE SHALL DETERMINE THE LENGTH OF ADVANCE NOTIFICATION REQUIRED:

TYPE OF CHANGE	ADVANCE NOTIFICATION NEEDED
DETOURS/ROAD CLOSURES	30-DAY NOTIFICATION PRIOR TO CLOSURE
LANE CLOSURES LASTING 2 WEEKS OR MORE	2-WEEKS
LANE CLOSURES OF LESS THAN 2 WEEKS	3-DAYS
LANE CLOSURES OF 2 DAYS OR LESS	1-DAY

THE COTA SENIOR SERVICE PLANNER SHALL BE CONTACTED 30 DAYS PRIOR TO ANY PLANNED CLOSURE ON ASSIGNED COTA ROUTES. ANY OTHER UNFORESEEN IMPACTS TO TRAFFIC SHALL BE IMMEDIATELY REPORTED AS THEY OCCUR.

4. THE CONTRACTOR SHALL BE RESPONSIBLE FOR THE PROTECTION AND SAFE MOVEMENT OF PEDESTRIANS THROUGH, AROUND, OR DETOURED AWAY FROM THE CONSTRUCTION SITE. TRAFFIC CONTROL FOR PEDESTRIAN MOVEMENT SHALL BE AS PER CITY OF COLUMBUS CONSTRUCTION AND MATERIAL SPECIFICATIONS, CITY OF COLUMBUS STANDARD CONSTRUCTION DRAWINGS, AND FIGURES 6H-28 (TA-28) AND 6H-29 (TA-29) OF PART VI OF THE OHIO MANUAL OF UNIFORM TRAFFIC CONTROL DEVICES. WHEN NOT SHOWN ON A SIGNED PLAN, ALL SIDEWALK DIVERSIONS AND TEMPORARY MID-BLOCK CROSSINGS SHALL BE PREAPPROVED BY THE PROJECT ENGINEER OR THE TEMPORARY TRAFFIC CONTROL COORDINATOR. ACCESS FOR PEDESTRIAN AND VEHICULAR TRAFFIC TO ALL ADJOINING PROPERTIES SHALL BE MAINTAINED AT ALL TIMES.

5. **MAINTAINING TRAFFIC DURING HOLIDAYS AND SPECIAL EVENTS**
NO WORK SHALL BE PERFORMED AND ALL EXISTING LANES SHALL BE OPEN TO TRAFFIC DURING DESIGNATED HOLIDAYS OR SPECIAL EVENTS INCLUDING THE OHIO STATE FOOTBALL HOME GAME. THE PERIOD OF TIME THAT THE LANES ARE TO BE OPEN DEPENDS ON THE DAY OF THE WEEK ON WHICH THE HOLIDAY OR EVENT FALLS. CONTACT THE CITY OF COLUMBUS TEMPORARY TRAFFIC CONTROL COORDINATOR, 614-645-5845 OR CELL, 614-332-7472 FOR EVENT DATES, LOCATIONS, AND SCHEDULE. HOLIDAYS WILL CONSIST OF CHRISTMAS, NEW YEARS, FOURTH OF JULY-RED, WHITE AND BOOM FIREWORKS NIGHT (6:00AM-12MIDNIGHT), MEMORIAL DAY, LABOR DAY, AND THANKSGIVING. RED, WHITE AND BOOM, FIREWORKS CELEBRATION AND A MINIMUM OF ONE DAY PRIOR TO FIREWORKS NIGHT SHALL REQUIRE ALL TEMPORARY TRAFFIC CONTROL DEVICES TO BE REMOVED FROM THE PROJECT AREA AND PLACE EITHER IN A PRE-DETERMINED LOCATION APPROVED BY THE TEMPORARY TRAFFIC CONTROL COORDINATOR OR COMPLETELY REMOVED FROM THE SITE.

6. THE CONTRACTOR SHALL CONTACT THE CITY OF COLUMBUS TEMPORARY TRAFFIC CONTROL COORDINATOR FOR ANY ADDITIONAL MOT REQUIREMENTS FOR SPECIAL EVENTS, INCLUDING OSU FOOTBALL HOME GAMES.

7. THE CONTRACTOR SHALL MAINTAIN ALL PERMANENT TRAFFIC CONTROLS NOT IN CONFLICT WITH THE TEMPORARY TRAFFIC CONTROLS THROUGHOUT THIS PROJECT. PERMANENT TRAFFIC CONTROLS MAY BE TEMPORARILY RELOCATED OR COVERED, AS APPROVED BY THE ENGINEER. THE CONTRACTOR SHALL ASSUME ALL LIABILITY FOR MISSING, DAMAGED, OR IMPROPERLY PLACED SIGNS.

8. ANY WORK DONE BY THE DEPARTMENT OF PUBLIC SERVICE, INCLUDING INSTALLATION, RELOCATION, REMOVAL AND/OR REPLACEMENT OF TEMPORARY TRAFFIC CONTROL DEVICES AS A RESULT OF WORK DONE BY THE CONTRACTOR OR AS A RESULT OF NEGLIGENCE OF THE CONTRACTOR, SHALL BE AT THE CONTRACTORS' EXPENSE.

9. THE ROADWAY SHALL NOT BE OPENED TO NON-CONSTRUCTION TRAFFIC UNTIL THE CRITICAL PERMANENT TRAFFIC CONTROLS ARE IN PLACE, OR UNTIL TEMPORARY TRAFFIC CONTROLS APPROVED BY THE ENGINEER, ARE INSTALLED. THE CRITICAL PERMANENT TRAFFIC CONTROLS ARE STOP, YIELD, ONE - WAY, DO NOT ENTER, RESTRICTED TURN SIGNS AND ALL STREET NAME SIGNS. OTHER CRITICAL SIGNS MAY BE NOTED ON THE PLANS AS WELL. THE CONTRACTOR ASSUMES ALL LIABILITY FOR THE PREMATURE REMOVAL OF TEMPORARY TRAFFIC CONTROLS.

10. **ITEM 614 - MAINTAINING TRAFFIC**
ALL COSTS THAT CONSIST OF MAINTAINING AND PROTECTING VEHICULAR AND PEDESTRIAN TRAFFIC ACCORDING TO THE LATEST EDITION OF THE CITY OF COLUMBUS CONSTRUCTION AND MATERIAL SPECIFICATIONS, THE OHIO MANUAL OF UNIFORM TRAFFIC CONTROL DEVICES FOR STREETS AND HIGHWAYS (OMUTCD), AND PER THE REQUIREMENTS DESIGNATED IN THE PLAN INCLUDING ALL LAW ENFORCEMENT OFFICER (LEO) AND FLAGGER HOURS SHALL BE INCLUDED IN THE LUMP SUM ITEM 614.
IN ADDITION TO THE REQUIREMENTS HEREIN, AND THE LATEST EDITION OF THE OHIO MANUAL OF UNIFORM TRAFFIC CONTROL DEVICES, A UNIFORMED LAW ENFORCEMENT OFFICER (LEO) SHALL BE PROVIDED FOR CONTROLLING TRAFFIC UNDER THE FOLLOWING CONDITIONS:

- WORK WITHIN A SIGNALIZED INTERSECTION, DEFINED AS THE AREA BOUNDED BY THE REAR XWALK LINES
- WHEN FLAGGING WITHIN THE INTERSECTION OF TWO ARTERIAL ROADWAYS
- WHEN SPECIFIED IN THE MAINTENANCE OF TRAFFIC PLAN OR AS WHEN DIRECTED BY THE PROJECT ENGINEER
- WHEN SHIFTING TRAFFIC LEFT OF CENTER, THROUGH A SIGNALIZED INTERSECTION, WITHOUT SHIFTING SIGNAL HEADS

A FLAGGER SHALL BE UTILIZED TO ASSIST IN CONTROLLING TRAFFIC WHILE EQUIPMENT IS ENTERING OR EXITING AN INTERSECTION OR WORK ZONE. THE CONTRACTOR MAY UTILIZE HIS OWN FLAGGER OR LEO UNDER PAY ITEM 614 MAINTAINING TRAFFIC, LUMP SUM. FLAGGERS AND LEO'S SHALL BE EQUIPPED ACCORDING TO THE STANDARDS FOR FLAGGING TRAFFIC CONTAINED IN THE OMUTCD. FLAGGING OPERATIONS PERFORMED BY LEO'S OR DESIGNATED FLAGGERS SHALL ONLY BE PERMITTED AS LONG AS ALL TRAFFIC CONTROL IS IN PLACE ACCORDING TO FIGURE 6H-10 (TA-10) IN THE OHIO MANUAL. PATROL CARS SHALL NOT BE USED IN FLAGGING OPERATIONS.

IF THE CONTRACTOR WISHES TO UTILIZE LEO'S WITH OR WITHOUT PATROL CARS FOR TRAFFIC CONTROL OTHER THAN FOR THAT REQUIRED IN THE PLANS, THEY MAY DO SO AT THEIR OWN EXPENSE. THE CONTRACTOR SHALL MAKE ARRANGEMENT THROUGH THE COLUMBUS POLICE DIVISION AT 614-645-4795.

LEO'S SHALL BE CONSIDERED TO BE EMPLOYED BY THE CONTRACTOR AND THE CONTRACTOR SHALL BE RESPONSIBLE FOR THEIR ACTIONS. ALTHOUGH EMPLOYED BY THE CONTRACTOR, THE CITY REPRESENTATIVE SHALL HAVE CONTROL OVER THEIR PLACEMENT. LEO'S SHALL NOT HAVE THE AUTHORITY TO CHANGE, EDIT OR MODIFY ANY MAINTENANCE OF TRAFFIC SCHEME WITHOUT THE PERMISSION OF THE TEMPORARY TRAFFIC CONTROL COORDINATOR OR PROJECT ENGINEER UNLESS AN EMERGENCY DEVELOPS.

IF A SAFETY HAZARD DEVELOPS, A LEO MAY BE ASSIGNED BY THE COLUMBUS PUBLIC SAFETY AND/OR THE PUBLIC SERVICE DIRECTOR AT THE CONTRACTOR'S EXPENSE.

ITEM 614 - LAW ENFORCEMENT OFFICER (LEO) WITH PATROL CAR, AS PER PLAN
IN ADDITION TO LEO AND FLAGGER HOURS INCLUDED IN ITEM 614 MAINTAINING TRAFFIC, LUMP SUM; THE FOLLOWING QUANTITIES HAVE BEEN CARRIED TO THE GENERAL SUMMARY TO BE USED AS DIRECTED BY THE ENGINEER OR AN ACCEPTABLE REPRESENTATIVE FOR THE CITY OF COLUMBUS. THE OFFICIAL PATROL CAR WITH TOP MOUNTED EMERGENCY FLASHING LIGHTS SHALL BE A PUBLIC SAFETY VEHICLE AS REQUIRED BY THE OHIO REVISED CODE. THE CONTRACTOR SHALL BE PAID FOR THIS BID ITEM ONLY IF DIRECTED BY THE ENGINEER.

ITEM 614, LAW ENFORCEMENT OFFICER WITH PATROL CAR, AS PER PLAN - _____ HOURS

ITEM 614 - LAW ENFORCEMENT OFFICER (LEO) WITHOUT PATROL CAR, AS PER PLAN
IN ADDITION TO LEO AND FLAGGER HOURS INCLUDED IN ITEM 614 MAINTAINING TRAFFIC, LUMP SUM; THE FOLLOWING QUANTITIES HAVE BEEN CARRIED TO THE GENERAL SUMMARY TO BE USED AS DIRECTED BY THE ENGINEER OR AN ACCEPTABLE REPRESENTATIVE FOR THE CITY OF COLUMBUS. THE CONTRACTOR SHALL BE PAID FOR THIS BID ITEM ONLY IF DIRECTED BY THE ENGINEER.

ITEM 614, LAW ENFORCEMENT OFFICER WITHOUT PATROL CAR, AS PER PLAN - _____ HOURS

TEMPORARY TRAFFIC CONTROL (IF APPLICABLE, FOR USE ON A PER PROJECT BASIS)

1. PORTABLE CHANGEABLE MESSAGE SIGNS (PCMS) SHALL BE INSTALLED A MINIMUM OF 7 DAYS PRIOR TO CLOSURE OF A ROADWAY. THE MESSAGE SHALL ADVISE THE MOTORIST OF THE DATES, TIMES, AND DURATION OF THE CLOSURE. THE PCMS SHALL REMAIN IN PLACE FOR 7 DAYS AFTER THE START OF THE CLOSURE.

2. WHEN NOT INCLUDED IN A SIGNED PLAN, A TTC PLAN (TTCP) INCLUDING PEDESTRIAN CONTROL SHALL BE SUBMITTED TO THE TTC COORDINATOR AT 614-645-0355 OR 614-645-5845 AT THE PRE-CONSTRUCTION MEETING OR A MINIMUM OF TEN (10) WORKING DAYS PRIOR TO BEGINNING WORK FOR APPROVAL. COPIES OF THE APPROVED TTCP SHALL BE GIVEN TO THE PROJECT ENGINEER AND KEPT ON SITE ALONG WITH THE STREET CLOSURE/OCCUPANCY PERMIT.

3. TYPE C STEADY-BURN OR TYPE D 360-DEGREE STEADY-BURN WARNING LIGHTS SHALL BE REQUIRED ON ALL BARRICADES, DRUMS, AND SIMILAR TRAFFIC CONTROL DEVICES IN USE AT NIGHT GAMES ONLY 42" REFLECTORIZED CHANNELIZING DEVICES (CONES) SHALL BE PERMITTED FOR NIGHTTIME WORK WITH THE APPROVAL OF THE TTC COORDINATOR AT 614-645-0355 OR 614-645-5845 PER O.D.O.T. STANDARDS.

4. A FLASHING ARROW PANEL (48" X 96"-TYPE C) SHALL BE USED IN LANE CLOSURES AS PER THE OHIO MANUAL.

5. ALL TRENCHES WITHIN THE ROAD RIGHT OF WAY SHALL BE BACKFILLED OR SECURELY PLATED PER (CITY OF COLUMBUS GENERAL POLICY ON STEEL PLATE USAGE DATED 11/15/2006 AND STD. DWG. 1441, LATEST EDITION) DURING NON-WORKING HOURS.

6. ALL EXISTING TRAFFIC LANES SHALL BE FULLY OPEN TO TRAFFIC AT ALL TIMES ON:_____.

7. ALL TRAFFIC LANES SHALL BE FULLY OPEN TO TRAFFIC FROM 6:00 A.M. TO 9:00 A.M. AND 4:00 P.M. TO 6:00 P.M., OR 6:00 TO 9:00 A.M. AND 3:00 TO 6:00 P.M. IN THE COLUMBUS BUSINESS DISTRICT (CBD) PARKING AREA, MONDAY THROUGH FRIDAY ON _____. _____LANE(S) MAY BE CLOSED TO TRAFFIC DURING WORKING HOURS.

8. ONE-WAY _____ LANE(S) OF TRAFFIC SHALL BE MAINTAINED AT ALL TIMES ON:_____.

9. TWO-WAY, TWO-LANE (ONE-LANE EACH DIRECTION) TRAFFIC SHALL BE MAINTAINED AT ALL TIMES BY USE OF EXISTING, PROPOSED, OR TEMPORARY PAVEMENT PER CITY OF COLUMBUS MAINTENANCE OF TRAFFIC, STANDARD CONSTRUCTION DRAWING 1510 AND FIGURE 6H-32 TYPICAL APPLICATION 32 (TA-32) OF THE OHIO MANUAL OF UNIFORM TRAFFIC CONTROL DEVICES.

10. TWO-WAY, ONE-LANE TRAFFIC MAY BE MAINTAINED DURING CONSTRUCTION OPERATIONS ON _____, PER THE CITY OF COLUMBUS MAINTENANCE OF TRAFFIC, STANDARD CONSTRUCTION DRAWING 1550 AND FIGURE 6H-10 (TA-10) OF THE OHIO MANUAL OF UNIFORM TRAFFIC CONTROL DEVICES.

11. _____ MAY BE CLOSED BETWEEN _____ AND _____ FOR A MAXIMUM OF ____ HOUR(S)/DAY(S) BETWEEN THE HOURS OF ____ AND _____ PER THE CITY OF COLUMBUS MAINTENANCE OF TRAFFIC, STANDARD CONSTRUCTION DRAWING 1540 AND FIGURE 6H-20 (TA-20) OF THE OHIO MANUAL AND/OR APPROVED BY THE DEPARTMENT OF PUBLIC SERVICE. THE CONTRACTOR SHALL BE RESPONSIBLE FOR ALL COSTS IN PROVIDING DETOUR INCLUDING THE REMOVAL AND REINSTALLATION OF ANY CONFLICTING TRAFFIC CONTROL AND/OR ANY NECESSARY TRAFFIC SIGNAL WORK.

12. A TEMPORARY DIVERSION SHALL BE PROVIDED AND MAINTAINED IN GOOD CONDITION ON _____ DURING THE PERIOD OF WORK. ALL SUCH DIVERSIONS SHALL BE IN ACCORDANCE WITH THE OHIO MANUAL OF UNIFORM TRAFFIC CONTROL DEVICES.

13. THE DEPARTMENT OF PUBLIC SERVICE WILL REMOVE OR COVER ALL PARKING METER HEADS PUT OUT OF SERVICE BY THIS PROJECT. THERE IS A $60.00 DOLLAR CHARGE FOR THE REMOVAL AND REINSTALLATION OF EACH METER. IN ADDITION, A DAILY METER FEE WILL BE CHARGED FOR ALL ENFORCEMENT HOURS FOR EACH METER TAKEN OUT OF SERVICE. SEE THE PARKING METER OUT OF SERVICE FEES NOTE FOR MORE INFORMATION AND THE CALCULATION OF METERS TAKEN OUT OF SERVICE, PLUS THE METER POST AND CORE NOTE. THESE CHARGES WILL BE COLLECTED FROM THE CONTRACTOR IN ADVANCE WITH THE ISSUANCE OF THE STREET OCCUPANCY/EXCAVATION PERMIT FROM THE DEPARTMENT OF PUBLIC SERVICE'S PERMIT OFFICE (614-645-7497). PARKING SERVICES SHALL BE NOTIFIED A MINIMUM OF FORTY-EIGHT (48) HOURS (EXCLUDING SAT, SUN, & HOLIDAYS) PRIOR TO BEGINNING WORK. CALL 614-645-4072.

14. FOR MOBILE PAYMENT ONLY ZONES, PLEASE REVIEW THE POSTED MOBILE PAYMENT ZONE SIGN AND PROVIDE THE MOBILE PAYMENT ZONE NUMBER FOR THE PARKING SPACE(S) THAT WILL BE REMOVED FROM SERVICE. IF "TICK-MARKS" ARE INCLUDED WITHIN THE PARKING ZONE, THEN COUNT THE NUMBER OF SPACES NEEDED TO BE OUT OF SERVICE. IF NO "TICKMARKS" ARE WITHIN THE PARKING ZONE, THEN CALCULATE THE NUMBER OF "SPACES" NEEDED BY USING 20 FEET PER SPACE. ONCE ALL THE INFORMATION LISTED ABOVE HAS BEEN COLLECTED FOR THE PAID PARKING TO BE REMOVED FROM SERVICE, CONTACT THE CITY OF COLUMBUS, DIVISION OF PARKING SERVICES AT PARKINGSERVICES@COLUMBUS.GOV FOR ASSISTANCE WITH ESTIMATING THE DAILY PAID PARKING REVENUE RATE. PROVIDE THE PROJECT LOCATION IN THE SUBJECT LINE OF THE EMAIL. PLEASE NOTE, IN THE SPRING/SUMMER OF 2020, THE ONLINE METER MAP WILL ALSO INCLUDE THE HOURLY RATE FOR MOBILE PAYMENT ZONES. THIS COST IS TO BE INCLUDED IN THE BID FOR THIS PROJECT AS A PART OF ITEM 614 MAINTENANCE OF TRAFFIC, LUMP SUM. AT THE TIME THE CONTRACTOR SUBMITS FOR THE STREET OCCUPANCY/EXCAVATION PERMIT, ALONG WITH THE PAID PARKING IDENTIFICATION NUMBERS TO BE INCLUDED ON THE PERMIT REQUEST FORM, THE CONTRACTOR IS TO PROVIDE A LISTING OF THE METER IDENTIFICATION NUMBERS AND/OR MOBILE PAYMENT ONLY ZONE NUMBERS AND THE NUMBER OF DAYS THAT EACH PAID PARKING SPACE IS TO BE OUT OF SERVICE, TO THE DEPARTMENT OF PUBLIC SERVICE PERMIT OFFICE. THE PERMIT OFFICE WILL VERIFY THAT THE HOURLY RATES ARE CORRECT AND CALCULATE THE COST OF THE PERMIT.

15. TEMPORARY "EMERGENCY NO PARKING" SIGNS SHALL BE INSTALLED BY THE CONTRACTOR IN AREAS WITH NO PARKING METERS AND TO REMOVE PARKING FROM SERVICE IN AREAS WHERE PARKING METERS, KIOSKS, AND OR MOBILE PAYMENT ZONE(S) PARKING HAS BEEN TAKEN OUT OF SERVICE. THE SIGNS SHALL SHOW THE PERMIT NUMBER, INSTALLATION DATE, WORKING DATES, AND HOURS OF RESTRICTION ON EACH SIGN. SIGNS SHALL BE POSTED AT 50' C/C MINIMUM BY USE OF ANY OF THE FOLLOWING ITEMS: EXISTING SIGN POSTS, EXISTING UTILITY POLES, DRUMS AND/OR 42" CONES and REMOVED BY THE CONTRACTOR IN AREAS WITH NO PARKING METERS. THE TEMPORARY SIGN(S) SHALL HAVE THE INSTALLATION DATE, WORKING DATES, AND HOURS OF RESTRICTION SHOWN ON EACH SIGN. THESE SIGNS MAY BE OBTAINED FROM THE DEPARTMENT OF PUBLIC SERVICE'S PERMIT OFFICE. THE POLICE DIVISION REQUIRES THE "EMERGENCY NO PARKING" SIGNS BE POSTED A MINIMUM OF SEVENTY-TWO (72) HOURS PRIOR TO ANY VEHICLES BEING TOWED. WITHIN TWENTY-FOUR (24) HOURS OF POSTING, THE CONTRACTOR SHALL SUPPLY THE DEPARTMENT OF PUBLIC SERVICE WITH A WRITTEN RECORD OF POSTED LOCATIONS (FAX: 614-645-3298).

16. THE CONTRACTOR SHALL CONTACT OHIO UTILITY PROTECTION SERVICE (OUPS), NOW "OHIO 811", TO LOCATE AND MARK ALL UNDERGROUND TRAFFIC CONTROL CABLES PRIOR TO THE BEGINNING OF ANY WORK WITHIN 450 FEET OF ANY SIGNALIZED INTERSECTION(S) OR WITHIN ANY POSTED AREA WHERE THE DEPARTMENT HAS UNDERGROUND CABLE. THE SIGNAL OPERATION ENGINEER 614-645-6418 SHALL BE NOTIFIED SIX (6) WEEKS IN ADVANCE FOR SIGNAL REVISIONS OR POLE RELOCATIONS.

17. THE CONTRACTOR SHALL CONTACT THE DIVISION OF REFUSE COLLECTION, OPERATIONS MANAGER MICHAEL PICKARD, 614-645-1675.

18. NO EXCAVATION SHALL BE MADE WITHIN FIVE (5) FEET OF ANY FOUNDATION THAT SUPPORTS SIGNAL POLES, TRAFFIC SIGNAL DISPLAYS OR SIGNS BY MAST ARM OR SIGNAL SPAN. EXCAVATION WITHIN EIGHT (8) FEET, BUT MORE THAN FIVE (5) FEET SHALL REQUIRE ADDITIONAL SUPPORT (DOWN GUY, HEAD GUY, BASE GUY, ETC.). THE CONTRACTOR SHALL CONTACT SIGNAL OPERATION PERSONNEL AT 614-645-0423 (CELL 614-419-4501) AT LEAST FORTY-EIGHT (48) HOURS (EXCLUDING SAT. & SUN.) PRIOR TO THE BEGINNING OF SUCH EXCAVATION SO THAT THE CITY CAN APPROVE THE STABILIZATION SETUP BY THE CONTRACTOR. IF UNABLE TO MAKE CONTACT THROUGH ABOVE NUMBERS, CALL 614-645-7393. STABILIZATION WILL BE DONE BY THE CONTRACTOR AT THE OWNERS'/CONTRACTING AGENCY'S EXPENSE.

19. SIGNAL CONDUIT CLEARANCE 3' HORIZONTAL AND 1' VERTICAL FROM ADJACENT UTILITIES SHALL BE MAINTAINED AT ALL TIMES.

20. WHEN ANY TRAFFIC CONTROL DEVICE, CONDUIT, OR CABLE IS DAMAGED, THE CONTRACTOR SHALL NOTIFY SIGNAL OPERATION PERSONNEL AT 614-645-0423 (CELL 614-419-4501) BETWEEN 7:00 AM AND 4:00 PM, MONDAY THROUGH FRIDAY. IF UNABLE TO MAKE CONTACT THROUGH THE OTHER NUMBERS, CALL 614-645-7393.

21. THE ROADWAY OR ANY SECTION OF ROADWAY SHALL NOT BE OPENED TO NON-CONSTRUCTION TRAFFIC UNTIL ALL TEMPORARY, NON-REFLECTIVE, BLACKOUT TAPE HAS BEEN COMPLETELY REMOVED FROM NON-CONFLICTING PERMANENT PAVEMENT MARKINGS FOR THAT AREA OF THE ROADWAY, OR UNLESS OTHERWISE DIRECTED IN WRITING BY THE ENGINEER. THIS IS SUPPLEMENTAL TO CITY OF COLUMBUS, CMS-614.11- G, AND SHALL BE PAID FOR THROUGH THE 614-LUMP SUM.

22. WHENEVER YELLOW CENTERLINES OR TURN-LANE LINES ARE PAVED OVER, REMOVED, OR OTHERWISE UNSERVICEABLE, THE CONTRACTOR SHALL INSTALL CLASS II TEMPORARY STRIPING
(MINIMUM 4' LONG SEGMENTS). TEMPORARY PAINT SHALL BE USED ON ALL MILLED
SURFACES. TEMPORARY TAPE SHALL BE USED ON ALL FINAL COURSES OF ASPHALT. PAINT OR
TAPE MAY BE USED ON INTERMEDIATE COURSES OF ASPHALT. IF APPROVED BY THE ENGINEER, DRUMS WITH STEADY BURNING TYPE C OR TYPE D 360 DEGREE WARNING LIGHTS AND "KEEP RIGHT" SIGNS MAY BE SUBSTITUTED FOR CENTERLINE MARKINGS.

23. CLASS II TEMPORARY STRIPING (MINIMUM 4' LONG SEGMENTS) SHALL BE AS PER ITEM 614 - WORK ZONE PAVEMENT MARKING AND SHALL BE PLACED WITHIN ONE (1) FOOT
LONGITUDINAL TOLERANCE OF THE PERMANENT STRIPE(S). ALL TEMPORARY STRIPING NOT TO
WITHIN ONE (1) FOOT TOLERANCE SHALL BE REMOVED AND REPLACED IN THE PROPER LOCATION BY THE CONTRACTOR. CLASS II TEMPORARY STRIPING SHALL BE OF THE APPROPRIATE COLOR AND SPACED A MAXIMUM OF FORTY (40) FEET CENTER TO CENTER.

EXISTING PERMANENT TRAFFIC CONTROL (NOTES REQUIRED ON ALL PROJECTS)

1. ANY WORK DONE BY THE DEPARTMENT OF PUBLIC SERVICE, INCLUDING INSTALLATION, RELOCATION, REMOVAL AND/OR REPLACEMENT OF PERMANENT TRAFFIC CONTROL DEVICES AS A RESULT OF WORK DONE BY THE CONTRACTOR OR AS A RESULT OF NEGLIGENCE OF THE CONTRACTOR, SHALL BE AT THE CONTRACTORS' EXPENSE.

2. THE CONTRACTOR SHALL BE RESPONSIBLE FOR REINSTALLATION AND/OR REPLACEMENT OF ALL PERMANENT TRAFFIC CONTROL DEVICES DAMAGED OR REMOVED DURING CONSTRUCTION. PERMANENT TRAFFIC CONTROL NO LONGER IN CONFLICT WITH TEMPORARY TRAFFIC CONTROL SHALL BE REPLACED IMMEDIATELY.

3. THE CONTRACTOR SHALL REPLACE ALL PAVEMENT MARKINGS, INCLUDING RAISED PAVEMENT MARKERS (RPM) SHOWN IN CONFLICT, REMOVED DUE TO CONSTRUCTION OR MAINTENANCE OF TRAFFIC SET UP, DESTROYED, OR RENDERED UNSERVICEABLE BY THE PROJECT ENGINEER OR THE PUBLIC SERVICE PAVEMENT MARKING MANAGER. ALL PAVEMENT MARKING MATERIALS SHALL BE REPLACED IN-LIKE KIND IF NOT SHOWN IN THE PLAN OR PERMIT INCLUDING RAISED PAVEMENT MARKERS. ALL PAVEMENT MARKINGS SHALL BE REPLACED IN FULL. NO PARTIAL LENGTH OR SECTIONS OF PAVEMENT MARKINGS SHALL BE REPLACED WITHOUT REMOVING THE ENTIRE MARKING BY USE OF THE WATER BLAST METHOD. REMOVAL BY ABRASIVE WHEEL GRINDING SHALL ONLY BE APPROVED BY THE PUBLIC SERVICE PAVEMENT MARKING MANAGER.

ASBUILT CHANGES / REVISIONS

DATE	DESCRIPTIONS
—	—
—	—
—	—
—	—
—	—

OHIO Utilities Protection SERVICE
Call Before You Dig
1-800-362-2764
OR 8-1-1
CALL TWO WORKING DAYS BEFORE YOU DIG
(NON MEMBERS MUST BE CALLED DIRECTLY)

6040 COLLINGS DR.

DESIGNER: K. KHAY

everstream®
FASTER FIBER. BETTER BUSINESS.®

INFORMATION IN THIS DOCUMENT IS PROPRIETARY AND CONFIDENTIAL AND SHALL NOT BE USED, COPIED, REPRODUCED, OR DISCLOSED WITHOUT PRIOR WRITTEN CONSENT OF EVERSTREAM

PLANS PREPARED BY:
NEESAI CAD DESIGNS
Drawing Information: Facility locations are general in nature and are only intended for approximate location reference. Neesai CAD Designs will not be held liable for the accuracy and will not assume responsibility for any damages resulting from these drawings.

LEGEND

E/P = EX. EDGE OF PAVEMENT		OHF = PROP. OVERHEAD FIBER	
C/L = EX. CENTER LINE		B = PROP. BURIED FIBER	
R/W = EX. RIGHT OF WAY		P/L = EX. PROPERTY LINE	

PROPOSED ANCHOR & GUY	PROPOSED HANDHOLE
FOREIGN/EXISTING ANCHOR & GUY	EXISTING HANDHOLE
AERIAL STORAGE LOOP	STORM DRAIN
BURIED STORAGE LOOP	FIRE HYDRANT

SCALE: NONE

SHEET: 3 OF 22

EXISTING PERMANENT TRAFFIC CONTROL (IF APPLICABLE, FOR USE ON A PER PROJECT BASIS)

1. ALL OVERHEAD CABLE, AND DOWN GUYS OR BACK GUYS SHALL NOT BLOCK ANY PORTION OF A TRAFFIC SIGNAL, TRAFFIC CONTROL SIGN, OR OTHER TRAFFIC CONTROL DEVICE SUCH THAT VISIBILITY OR OPERATION OF THE TRAFFIC CONTROL DEVICE IS IMPAIRED.

2. ALL PERMANENT PAVEMENT MARKINGS AND TRAFFIC CONTROL SIGNS AS SHOWN ON THIS PLAN SHALL BE INSTALLED BY THE CONTRACTOR AT THE PROJECTS EXPENSE. THE PROJECT ENGINEER SHALL BE NOTIFIED TO DIRECT APPROPRIATE PERSONNEL A MINIMUM OF FORTY-EIGHT (48) HOURS (EXCLUDING SAT. & SUN.) PRIOR TO THE INSTALLATION OF PERMANENT MARKINGS TO INSPECT AND APPROVE THE PAVEMENT MARKING LAYOUT PRIOR TO PLACING THE PERMANENT MARKINGS.

3. PERMANENT STRIPING OR CLASS I TEMPORARY STRIPING SHALL BE INSTALLED NO LATER THAN FOURTEEN (14) CALENDAR DAYS AFTER THE FINAL PAVING COURSE IS COMPLETED. THE PAVING CONTRACTOR SHALL BE RESPONSIBLE TO NOTIFY THE STRIPING CONTRACTOR TO INSURE THE PERMANENT STRIPING IS INSTALLED WITHIN THE FOURTEEN (14) CALENDAR DAY LIMIT.

4. IF THE DEPARTMENT OF PUBLIC SERVICE IS TO INSTALL PERMANENT STRIPING, THE PROJECT ENGINEER SHALL BE NOTIFIED TO DIRECT APPROPRIATE PERSONNEL A MINIMUM OF TEN (10) WORKING DAYS PRIOR TO THE APPLICATION OF THE FINAL COURSE OF PAVEMENT.

5. **AT ANY LOCATION WHERE THE CONTRACTOR DAMAGES DETECTORS AND/OR THEIR LEAD-IN CABLES THE CONTRACTOR SHALL REPLACE THEM. AT ANY LOCATION WHERE DETECTION IS CHANGED FROM MAG PROBE UNITS TO LOOPS, THE CONTRACTOR SHALL REPLACE THE PROBE LEAD-IN WITH LOOP LEAD-IN CABLE. ALL REPAIRS TO DETECTION SHALL BE COMPLETED WITHIN 21 DAYS FROM DAMAGE TO DETECTION ON A PER INTERSECTION BASIS. IF THE 21DAY REPAIR REQUIREMENT CANNOT BE SATISFIED AT ANY LOCATION WHERE THE CONTRACTOR DAMAGES DETECTORS AND/OR THEIR LEAD-IN CABLES, THE CONTRACTOR, AT THE DISCRETION OF SIGNAL OPERATIONS PERSONNEL, MAY BE REQUIRED TO INSTALL A VERSICAM FLEX CAMERA SYSTEM, A WAVETRONIX RADAR SYSTEM, OR TEMPORARY LOOP DETECTION. ANY CONTRACTOR FAILING TO COMPLY WITH THESE GUIDELINES SHALL BE SUBJECT TO PENALTY TO THE SUM OF $100.00 PER DAY FOR EACH DAY BEYOND THE 21 DAY REPAIR PERIOD ON A PER INTERSECTION BASIS, UNTIL CONDITIONS ARE MET TO THE SATISFACTION OF THE SIGNAL OPERATIONS PERSONNEL. THIS PENALTY DEDUCTION SHALL BE SPECIFIC FOR EACH SIGNALIZED INTERSECTION EFFECTED BY THIS PROJECT AND SEPARATE FROM ANY LIQUIDATED DAMAGES FOR THE PROJECT AS A WHOLE. THE WORK TO INSTALL THE DETECTION SHALL CONFORM TO THE CITY OF COLUMBUS STANDARD DRAWING 4300 AND THE CITY OF COLUMBUS CONSTRUCTION AND MATERIAL SPECIFICATIONS, LATEST EDITION, WITH THE FOLLOWING PROVISIONS:**

   a) **THE CONTRACTOR SHALL PROVIDE THE DEPARTMENT OF PUBLIC SERVICE'S INSPECTOR, PRIOR TO THE COMMENCEMENT OF WORK, THE IMSA (INTERNATIONAL MUNICIPAL SIGNAL ASSOCIATION CERTIFICATION PAPERS FOR ALL SIGNAL TECHNICIANS WORKING ON THIS PROJECT.**

   b) **LOCATIONS OF THE REPLACEMENT DETECTION SHALL BE FIELD MARKED OR DIMENSIONED DRAWINGS SHALL BE SUBMITTED TO THE CONSTRUCTION SECTION BY DEPARTMENT OF PUBLIC SERVICE PERSONNEL. LOCATION OF FINAL PAVEMENT MARKINGS OR THE MARKINGS THEMSELVES SHALL BE CLEARLY INDICATED ON THE ASPHALT PRIOR TO DETECTOR LOCATIONS BEING MARKED. THE CONTRACTOR SHALL LAYOUT THE LOOPS ON THE PAVEMENT IF DRAWINGS ARE SUBMITTED. IF DRAWINGS HAVE NOT BEEN PROVIDED, CONTACT SIGNAL OPERATIONS PERSONNEL AT 614-645-0423 (CELL 614-419-4501) AT LEAST TWO WORKING DAYS PRIOR TO NEEDING THE LOCATION MARKED. IF UNABLE TO MAKE CONTACT THROUGH THE ABOVE NUMBERS, CALL 614-645-7393.**

   c) **THE SAW SLOT DEPTH FOR LOOP WIRE INSTALLATION SHALL BE FOUR (4) INCHES WITH SIX (6) INCHES AT THE CONDUIT ENTRANCE. IF ADVERSE PAVEMENT CONDITIONS WARRANT, DEPTH MAY BE INCREASED TO SIX (6) INCHES THROUGHOUT AND SHALL BE DETERMINED BY THE DEPARTMENT OF PUBLIC SERVICE INSPECTOR.**

   d) **EACH LOOP SHALL HAVE ITS OWN CONDUIT FROM EDGE OF PAVEMENT TO PULL BOX UNLESS SPECIFIED OTHERWISE BY THE DEPARTMENT OF PUBLIC SERVICE INSPECTOR.**

   e) **THE PULLBOX ASSEMBLY SHALL BE RATED AS MEDIUM TO HEAVY DUTY, TO BE INSTALLED IN CONCRETE WALKWAYS, AND SHALL HAVE ALL STAINLESS STEEL HARDWARE. THE PULLBOX COVER SHALL HAVE THE WORD "TRAFFIC" ON IT. THE COVER SHALL BE BOLTED TO THE BOX AND SHALL BE POLYMER CONCRETE. THE COVER PLUS HOUSING AS A UNIT SHALL BE RATED TO WITHSTAND A MINIMUM 20,000 LB. STATIC LOAD OVER A 10"X10" AREA AS PER ASTM C-857. THE BOX DEPTH SHALL BE 15 INCHES MINIMUM TO 30 INCHES MAXIMUM. IF THE PROJECT DOES NOT SPECIFY 725.06 POLYMER CONCRETE PULL BOXES, THE SUPPLIED ASSEMBLIES SHALL BE AS FOLLOWS: CDR SYSTEMS MODEL SA32-1015-18, OR SYNERTECH MODEL S1118B18FA. SIX (6) INCHES OF #57 AGGREGATE SHALL BE PLACED AT THE BOTTOM OF THE PULLBOX. NO CONDUIT SHALL PROTRUDE MORE THAN THREE (3) INCHES INSIDE THE PULLBOX. CONDUIT ELLS OR EXTENSIONS MAY BE USED TO ALIGN THE CONDUIT WITH THE HOUSING. THE COST FOR EXTENSIONS OR ELLS IF NEEDED SHALL BE INCIDENTAL TO THE PER UNIT PRICE.**

   f) **WHEN A PULLBOX IS NOT USED, THE SOLDERED SPLICE SHALL BE MADE IN AN ANCHOR BASE STRAIN POLE OR A CONDUIT RISER SPECIFIED BY THE DEPARTMENT OF PUBLIC SERVICE'S REPRESENTATIVE, EXCEPT WHERE A CONTROLLER CABINET IS MOUNTED ON THAT POLE IN WHICH CASE THE LOOP WIRE SHALL BE ROUTED DIRECTLY INTO THE CABINET.**

   g) **THE CONTRACTOR SHALL NOT MAKE ANY WIRING CONNECTIONS OR ADJUSTMENTS INSIDE THE CONTROL CABINET. WHEN SUCH CONNECTIONS ARE REQUIRED, THE CONTRACTOR SHALL NOTIFY THE TRAFFIC OPERATIONS SHOP 614-645-7393, MON.- FRI., 8 AM TO 4 PM, TO SCHEDULE CITY FORCES FOR MAKING THE ACTUAL CONNECTIONS. THE CONTRACTOR SHALL BE AVAILABLE AT THE AGREED TIME. THE CONTRACTOR WILL BE BILLED FOR ANY TIME THAT CITY FORCES ARE REQUIRED TO WAIT FOR THE CONTRACTORS' WORK TO BE COMPLETED.**

   h) **CONDUIT PLACED IN "RIGHT OF WAY" AREAS BEARING NO TRAFFIC FOR DETECTOR LEAD IN SHALL BE ITEM 725.051, CITY OF COLUMBUS CONSTRUCTION AND MATERIAL SPECIFICATIONS, LATEST EDITION. CONDUIT PLACED UNDER A ROADWAY OR IN AREAS THAT MAY BEAR TRAFFIC SHALL BE CONCRETE ENCASED (SIZES AND TYPE TO BE DETERMINED BY THE DEPARTMENT OF PUBLIC SERVICE'S REPRESENTATIVE. ALL CONDUITS SHALL BE PLACED AT A MINIMUM DEPTH OF 24".**

   i) **LOOP WIRE SHALL BE IDENTIFIED WITH A PLASTIC TAG (WBLT, EBRT, ETC.) AT THE SPLICE POINT OR AT ENTRANCE TO THE CABINET IF LEAD-IN CABLE IS NOT USED.**

   j) **THE ITEMS AND ESTIMATED QUANTITIES FOR THE REPLACEMENT OF THE DEPARTMENT OF PUBLIC SERVICE'S DETECTION ITEMS SHALL BE INCLUDED IN THESE PLANS WHEN DIRECTED BY THE PLAN REVIEWER. THESE ESTIMATES ARE FOR THE PURPOSE OF BIDDING THE PROJECT. THE FOLLOWING IS A LIST OF THE ITEMS AND QUANTITIES PROJECTED FOR USE IN DETECTOR REPLACEMENT FOR THIS PROJECT:**

ITEM	QUANTITY	UNIT	ITEM DESCRIPTION
202		SF	WALK REMOVED
608		SF	4" CONCRETE WALK
632		LF	CONDUIT RISER, 1 OR 2 INCH DIAMETER
625		LF	CONDUIT 1, 1 1/2, OR 2 INCH (AS PER PLAN)
625		LF	TRENCH
625		EACH	PULLBOX
632		EACH	DETECTOR LOOP
632		LF	LOOP DETECTOR LEAD-IN CABLE
632		LF	LASH / UNLASHED CABLE

THE CONTRACTOR SHALL NOTIFY SIGNAL OPERATION PERSONNEL AT 614-645-0423 (CELL 614-419-4501) AFTER ALL LOOPS HAVE BEEN INSTALLED AT EACH INTERSECTION. IF UNABLE TO MAKE CONTACT THROUGH THE ABOVE NUMBER, CALL 614-645-7393. THE DEPARTMENT OF PUBLIC SERVICE SHALL INSPECT ALL SENSORS AND TEST AS NECESSARY. THE CONTRACTOR SHALL REPLACE ALL LOOPS NOT MEETING SPECIFICATIONS.

MOT PERMIT NOTES

1. PERMIT MOT / TTC - SUBMITTAL

a.STANDARD DRAWINGS - ONLY COLUMBUS 1500-1550 WILL BE ACCEPTED FOR USE MOT / TTC ON PERMITS.

b.SITE SPECIFIC
REQUIRED - WHEN WORK ZONE IMPACTS A SIGNALIZED INTERSECTION.
REQUIRED - WHEN WORK AREA IN THE CENTRAL BUSINESS DISTRICT.
REQUIRED - WHEN REQUESTED BY MOT PERMIT REVIEW.
REQUIRED - LAW ENFORCEMENT OFFICER (LEO) AT SIGNALIZED INTERSECTIONS.

2. MASS TRANSIT AND RIDE SHARE

a.COTA BUS STOPS
SHALL CONTACT PRIOR TO START - PAUL EVANS - COTA SERVICE PROGRAM MANAGER (614) 308-4373 evanspm1@cota.com.
THIRTY DAYS - ANY CLOSURE WHICH CREATES DELAY OR DETOUR ON ASSIGNED ROUTES REQUIRES A TEMPORARY RELOCATION.
24 HOURS - PRIOR TO START OF CONSTRUCTION WITHIN 300' OF COTA ASSETS IN THE RIGHT OF WAY.
IMMEDIATELY - IN EVENT OF UNPLANNED WORK AFFECTING COTA BUS STOPS.

b.COTA ASSETS
SHALL CONTACT PRIOR TO START - PAUL EVANS - COTA SERVICE PROGRAM MANAGER (614) 308-4373 evanspm1@cota.com.
SHALL KEEP OPEN ALL STOPS & STATIONS IN WORK ZONE IF RELOCATION IS NOT REQUIRED BY COTA PROGRAM SERVICES MANAGER.

c.COGO - RIDE SHARE BIKE CHARGING STATIONS
SHALL CONTACT PRIOR TO START - CHET RIDENOUR - COGO BIKE SHARE OPERATIONS MANAGER (614) 506-8100 cridenour@lyft.com.
THIRTY DAYS - IF CLOSURE IMPACTS COGO BIKE STATION, LIMITS PUBLIC ACCESS DURING CONSTRUCTION.
24 HOURS - PRIOR TO START OF CONSTRUCTION WITHIN 300' OF COGO ASSETS.
IMMEDIATELY - IN EVENT OF UNPLANNED WORK AFFECTING COGO/LIFT ASSETS

3. BIKES AND PEDESTRIANS

a.BIKE LANE CLOSURE
WHEN A BIKE LANE PAVEMENT MARKING EXIST AND MUST BE INCLUDED IN THE MOT / TTC PLAN.
REFERENCE - MOT SHEET 1500 ADVANCE WARNING SIGNS WHEN CLOSING THE BIKE LANE AND MERGING BIKES.
REFERENCE - MOT SHEET 1500 TABLE 4 ADVANCE WARNING SIGN SPACING.
REQUIRED - ONE (1) SHARE THE ROAD SIGN MID-TAPER WHEN NO BIKE LANE BUT SHARROWS ONLY EXIST.

b.SIDEWALKS / CROSSWALKS
THE CONTRACTOR:
SHALL NOT CLOSE OPPOSING SIDEWALKS OR CROSSWALKS SIMULTANEOUSLY.
SHALL KEEP SIDEWALKS & CROSSWALKS BEYOND THE ACTIVE WORK AREA OPEN AT ALL TIMES.
SHALL PLACE R9-9 SIGNS EACH END OF THE ACTIVE WORK AREA.
SHALL PLACE R9-11 SIGNS AT THE NEAREST ADA CROSSWALKS BEYOND THE ACTIVE WORK AREA.
Note: "Sidewalks" defined ANY area within the right of way used by pedestrians.

4. PARKING

a.DRIVEWAYS
THE CONTRACTOR:
SHALL PROVIDE 72 HOURS ADVANCE NOTICE WHEN CLOSING DRIVEWAYS.
SHALL RESTORE ACCESS FOLLOWING END OF WORK THAT DAY AND MAINTAIN AREA IN COMPLIANCE WITH ADA REQUIREMENTS.
SHALL MONITOR OBSTRUCTED DRIVEWAYS AND RESPONSIBLE TO MAINTAIN ACCESS AS NEEDED.

b.ON STREET
THE CONTRACTOR:
SHALL CONTACT PARKING ENFORCEMENT (614) 645-4072 48 HOURS IN ADVANCE WHEN CLOSING METERED/APP PAY PARKING.
SHALL LIMIT PARKING RESTRICTIONS TO "AS NEEDED" TO SAFELY COMPLETE THE WORK.
SHALL PROVIDE 72 HOURS ADVANCE NOTICE TO RESIDENTS WHEN TEMPORARILY CLOSING ON STREET PARKING AREAS.
SHALL RESTORE ACCESS FOLLOWING END OF EACH WORK DAY.
SHALL MAINTAIN LANE WIDTH SUFFICIENT FOR VEHICLES TO SAFELY PASS THROUGH WORK AREA.
SHALL MONITOR AND ASSIST PERMITTED HANDICAP PARKING SPACES AS DEFINED BY THE ADA.

5. ADVANCE WARNING SIGNS

a.SIGNS, SIZES, SPACING, DISTANCE
THE CONTRACTOR:
SHALL PLACE SIGNS ON INTERSECTING STREETS WHEN NO ADVANCED WARNING SIGN IS SEEN PRIOR TO ENTERING THE WORK AREA.
b.SIZES < 40 MPH "LOW SPEED" AND 36" x 36 SHOULD BE USED.
c.SIZES > 45 MPH "HIGH SPEED" AND 48" x 48" SHOULD BE USED.
d.SPACING PER MOT SHEET 1500 TABLE 2.
e.DISTANCE VARIES WHEN TURN ONLY LANES EXIST. THE SPACE FROM STOP BAR TO TURN LANE PAVEMENT MARKINGS ORIGIN, CONTINUE PER TABLE 2.

6. TMC - SIGNAL TIMING, CAMERA MONITORING AND RECORDING

a.CITY OF COLUMBUS TMC - TRAFFIC MANAGEMENT CENTER (614) 645-7249
b.SIGNALS - TIMING CHANGES MAY BE REQUESTED BY SPECIAL DUTY LAW ENFORCEMENT OFFICER (LEO).
c.CAMERAS - MONITORING AND RECORDING MUST BE ARRANGED 72 HOURS IN ADVANCE.

7. SHOULDERS

a.DEFINITIONS: Edge of Pavement (EOP), Back of Curb (BOC), Face of Curb (FOC), Solid White Line (SWL), Lane of Travel (LOT)
THE CONTRACTOR:
SHALL NOT OCCUPY, BLOCK OR IMPEDE A LANE OF TRAVEL (LOT) WHILE USING A SHOULDER CLOSURE PER 6H-3 MODIFIED
SHALL PERFORM WORK BEYOND THE EDGE OF PAVEMENT (EOP), SOLID WHITE LINE (SWL), LANE OF TRAVEL (LOT), OR BACK OF CURB (BOC).
SHALL MAINTAIN A BUFFER, SAFE DISTANCE FROM THE SWL FOR TRAFFIC CONTROL DEVICE PLACEMENT ON EOP, SWL OR LOT.
SHALL PLACE R9-9 & R9-11 SIGNS FOR SIDEWALK CLOSURE & PEDESTRIAN DETOURS PER TYPICAL 6H29 FOR PEDESTRIAN SAFETY.
SHALL SECURE PERMISSION IN ADVANCE TO PARK, STORE, STAGE & SITE ACCESS

b.NOTES
Work Zone - Equipment, Staging & Storage is prohibited within 2' of the EOP, SWL, and LOT.
Traffic Conditions - Must remain normal when deploying shoulder closures.
Separation - A 2' Buffer between the work zone and lane of travel must be maintained.
Compliance - If not in compliance with the above MOT Approval is REVOKED. Cease and Contact the MOT Supervisor immediately (614) 645-0355.

8. EASEMENTS

a.EASEMENT ACCESS WITHIN PUBLIC RIGHT OF WAY
THE CONTRACTOR:
SHALL DEPLOY TRAFFIC CONTROL WHEN STAGING, STORAGE AND ACCESSING EASEMENTS.
SHALL DEPLOY PEDESTRIAN SAFETY MEASURES.

b.NOTES - Typical 1550.1 Traffic Control Plan when Accessing Easements Follow the Guidance Above

ASBUILT CHANGES / REVISIONS

DATE	DESCRIPTIONS
—	—
—	—
—	—
—	—
—	—

OHIO Utilities Protection SERVICE
Call Before You Dig
1-800-362-2764
OR 8-1-1
CALL TWO WORKING DAYS BEFORE YOU DIG
(NON MEMBERS MUST BE CALLED DIRECTLY)

6040 COLLINGS DR.

DESIGNER: K. KHAY

everstream®
FASTER FIBER. BETTER BUSINESS.®

INFORMATION IN THIS DOCUMENT IS PROPRIETARY AND CONFIDENTIAL AND SHALL NOT BE USED, COPIED, REPRODUCED, OR DISCLOSED WITHOUT PRIOR WRITTEN CONSENT OF EVERSTREAM

PLANS PREPARED BY:
NEESAI CAD DESIGNS
Drawing Information: Facility locations are general in nature and are only intended for approximate location reference. Neesai CAD Deisgns will not be held liable for the accuracy and will not assume responsibility for any damages resulting from these drawings.

LEGEND

E/P	= EX. EDGE OF PAVEMENT	OHF	= PROP. OVERHEAD FIBER		PROPOSED ANCHOR & GUY		PROPOSED HANDHOLE
C/L	= EX. CENTER LINE	B	= PROP. BURIED FIBER		FOREIGN/EXISTING ANCHOR & GUY		EXISTING HANDHOLE
R/W	= EX. RIGHT OF WAY	P/L	= EX. PROPERTY LINE		AERIAL STORAGE LOOP		STORM DRAIN
					BURIED STORAGE LOOP		FIRE HYDRANT

SCALE: NONE

SHEET: 4 OF 22

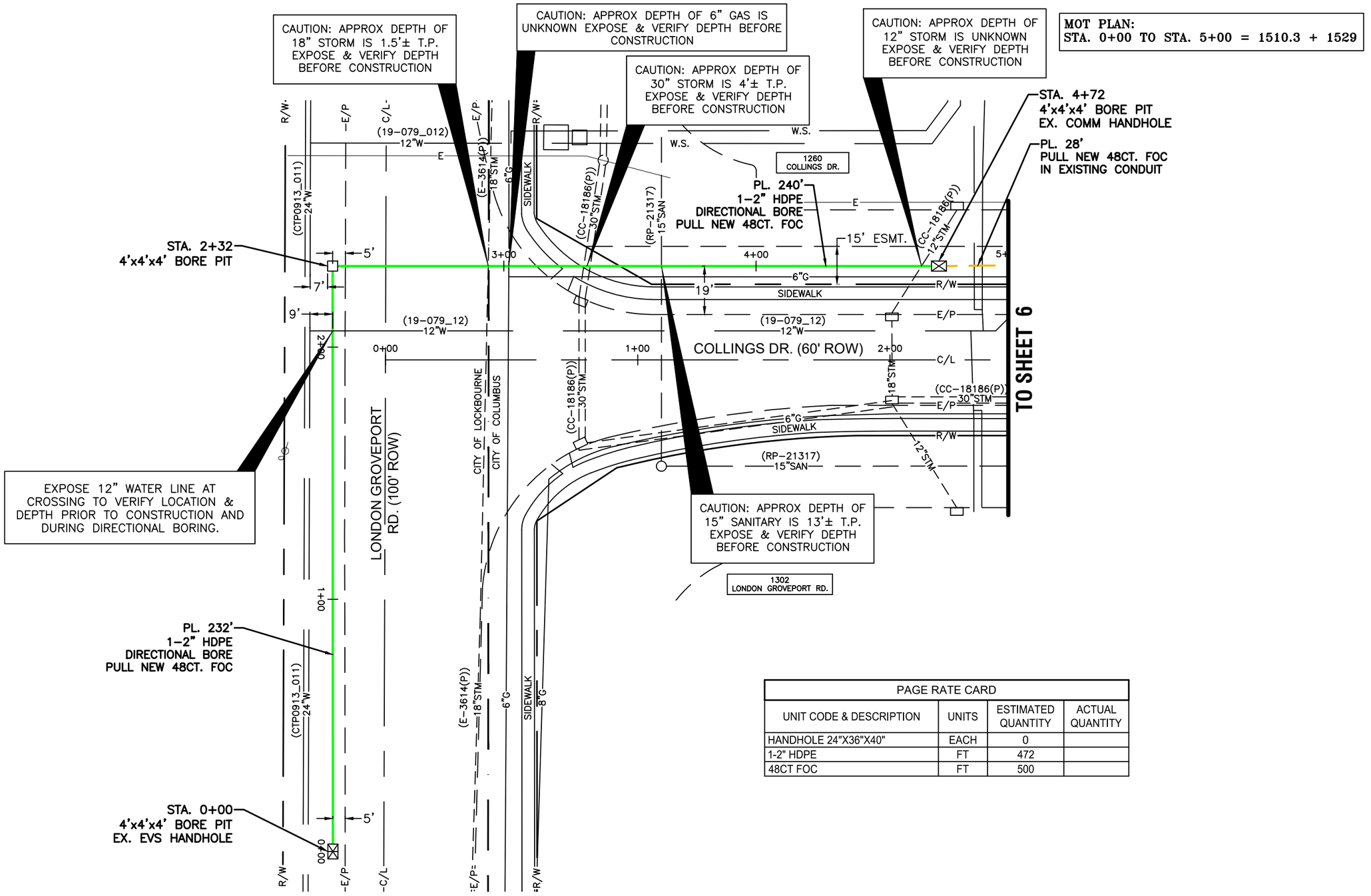

LEGEND:

- G — GAS LINE
- -SAN- — SANITARY SEWER
- STM — STORM SEWER
- W — WATER LINE
- S/L — SLUDGE LINE
- E — ELECTRIC
- TR — TRAFFIC
- TRAFFIC SIGNAL POLE
- TRAFFIC PULL BOX
- PEDESTRIAN PEDESTAL

ASBUILT CHANGES / REVISIONS

DATE	DESCRIPTIONS
–	–
–	–
–	–
–	–
–	–
–	–

PAGE RATE CARD

UNIT CODE & DESCRIPTION	UNITS	ESTIMATED QUANTITY	ACTUAL QUANTITY
HANDHOLE 24"X36"X40"	EACH	0	
1-2" HDPE	FT	472	
48CT FOC	FT	500	

OHIO Utilities Protection SERVICE
Call Before You Dig
1-800-362-2764
OR 8-1-1
CALL TWO WORKING DAYS BEFORE YOU DIG
(NON MEMBERS MUST BE CALLED DIRECTLY)

6040 COLLINGS DR.

DESIGNER: K. KHAY

SCALE BAR = 1:40
0 20 40 60 80

everstream®
FASTER FIBER. BETTER BUSINESS.®

INFORMATION IN THIS DOCUMENT IS PROPRIETARY AND CONFIDENTIAL AND SHALL NOT BE USED, COPIED, REPRODUCED, OR DISCLOSED WITHOUT PRIOR WRITTEN CONSENT OF EVERSTREAM

PLANS PREPARED BY:
NEESAI CAD DESIGNS

Drawing Information: Facility locations are general in nature and are only intended for approximate location reference. Neesai CAD Designs will not be held liable for the accuracy and will not assume responsibility for any damages resulting from these drawings.

LEGEND

- E/P = EX. EDGE OF PAVEMENT
- C/L = EX. CENTER LINE
- R/W = EX. RIGHT OF WAY
- OHF = PROP. OVERHEAD FIBER
- B = PROP. BURIED FIBER
- P/L = EX. PROPERTY LINE
- PROPOSED ANCHOR & GUY
- FOREIGN/EXISTING ANCHOR & GUY
- AERIAL STORAGE LOOP
- BURIED STORAGE LOOP
- PROPOSED HANDHOLE
- EXISTING HANDHOLE
- STORM DRAIN
- FIRE HYDRANT

HORIZ. 1" = 40'
VERT. 1" = 10'

SHEET: 5 OF 22

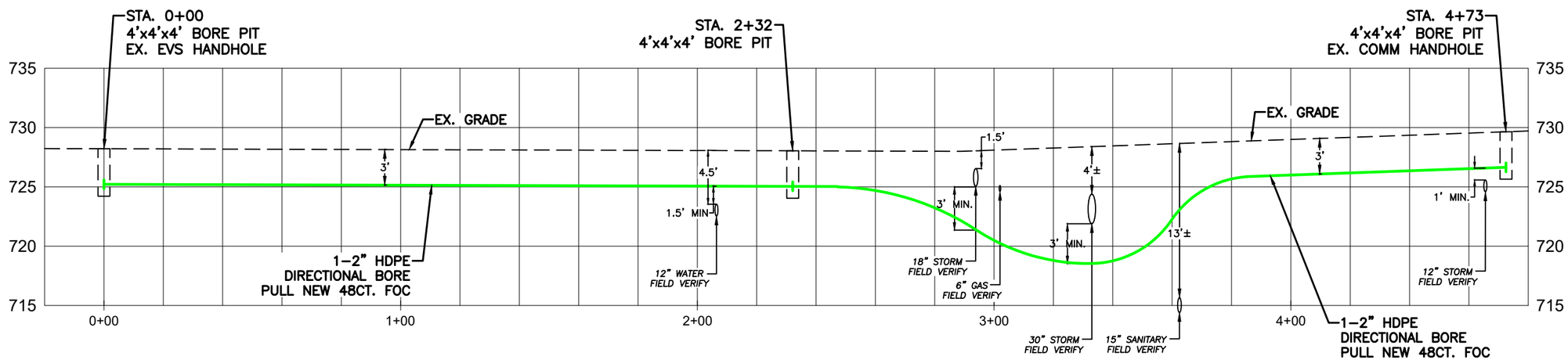

LEGEND:

—G—	GAS LINE
-SAN-	SANITARY SEWER
—STM—	STORM SEWER
—W—	WATER LINE
—S/L—	SLUDGE LINE
—E—	ELECTRIC
—TR—	TRAFFIC
	TRAFFIC SIGNAL POLE
	TRAFFIC PULL BOX
	PEDESTRIAN PEDESTAL

ASBUILT CHANGES / REVISIONS

DATE	DESCRIPTIONS
–	–
–	–
–	–
–	–
–	–
–	–

OHIO Utilities Protection SERVICE
Call Before You Dig
1-800-362-2764
OR 8-1-1
CALL TWO WORKING DAYS BEFORE YOU DIG
(NON MEMBERS MUST BE CALLED DIRECTLY)

6040 COLLINGS DR.

DESIGNER: K. KHAY

SCALE BAR = 1:40
0 20 40 60 80

everstream®
FASTER FIBER. BETTER BUSINESS.®

INFORMATION IN THIS DOCUMENT IS PROPRIETARY AND CONFIDENTIAL AND SHALL NOT BE USED, COPIED, REPRODUCED, OR DISCLOSED WITHOUT PRIOR WRITTEN CONSENT OF EVERSTREAM

PLANS PREPARED BY:
NEESAI CAD DESIGNS

Drawing Information: Facility locations are general in nature and are only intended for approximate location reference. Neesai CAD Deisgns will not be held liable for the accuracy and will not assume responsibility for any damages resulting from these drawings.

LEGEND

—E/P—	= EX. EDGE OF PAVEMENT	—OHF—	= PROP. OVERHEAD FIBER
—C/L—	= EX. CENTER LINE	—B—	= PROP. BURIED FIBER
—R/W—	= EX. RIGHT OF WAY	—P/L—	= EX. PROPERTY LINE

PROPOSED ANCHOR & GUY	PROPOSED HANDHOLE
FOREIGN/EXISTING ANCHOR & GUY	EXISTING HANDHOLE
AERIAL STORAGE LOOP	STORM DRAIN
BURIED STORAGE LOOP	FIRE HYDRANT

HORIZ. 1" = 40'
VERT. 1" = 10'

SHEET:
5A OF 22

MOT PLAN: 1550.1 + 1529

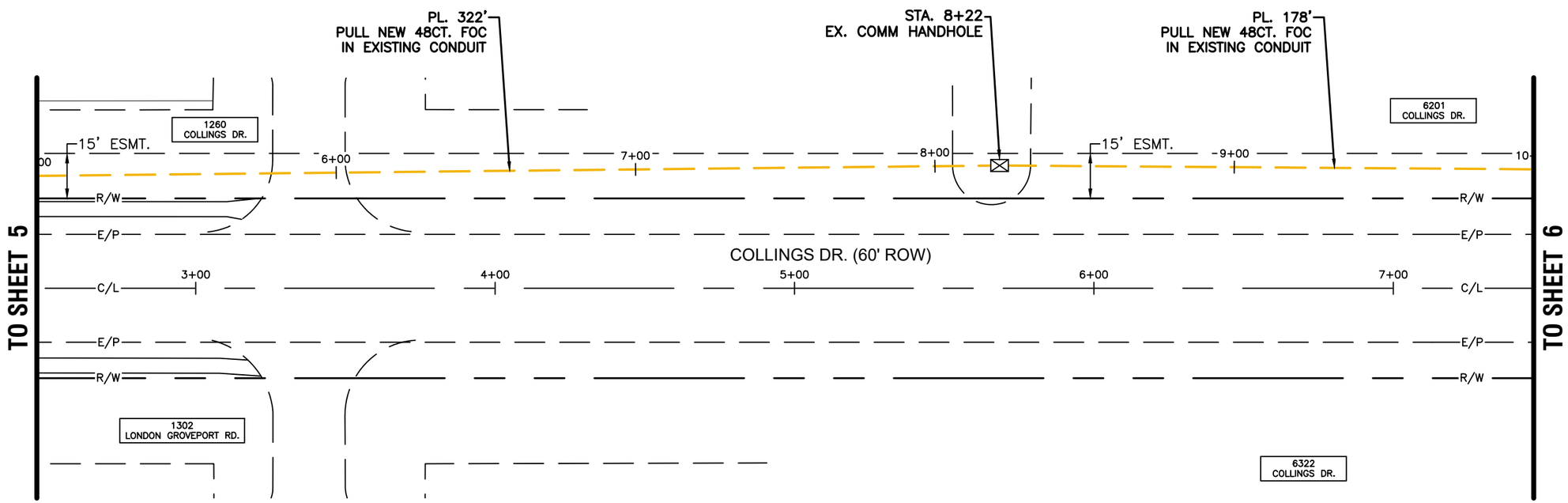

PAGE RATE CARD			
UNIT CODE & DESCRIPTION	UNITS	ESTIMATED QUANTITY	ACTUAL QUANTITY
HANDHOLE 24"X36"X40"	EACH	0	
1-2" HDPE	FT	0	
48CT FOC	FT	500	

CONTRACTOR: SEE PERMIT MOT NOTE #8 a & b – EASEMENTS

LEGEND:

- G — GAS LINE
- -SAN- — SANITARY SEWER
- STM — STORM SEWER
- W — WATER LINE
- S/L — SLUDGE LINE
- E — ELECTRIC
- TR — TRAFFIC
- TRAFFIC SIGNAL POLE
- TRAFFIC PULL BOX
- PEDESTRIAN PEDESTAL

ASBUILT CHANGES / REVISIONS

DATE	DESCRIPTIONS
–	–
–	–
–	–
–	–
–	–

OHIO Utilities Protection SERVICE
Call Before You Dig
1-800-362-2764
OR 8-1-1
CALL TWO WORKING DAYS BEFORE YOU DIG
(NON MEMBERS MUST BE CALLED DIRECTLY)

6040 COLLINGS DR.

DESIGNER: K. KHAY

SCALE BAR = 1:40
0 20 40 60 80

everstream®
FASTER FIBER. BETTER BUSINESS.®

INFORMATION IN THIS DOCUMENT IS PROPRIETARY AND CONFIDENTIAL AND SHALL NOT BE USED, COPIED, REPRODUCED, OR DISCLOSED WITHOUT PRIOR WRITTEN CONSENT OF EVERSTREAM

PLANS PREPARED BY:
NEESAI CAD DESIGNS

Drawing Information: Facility locations are general in nature and are only intended for approximate location reference. Neesai CAD Deisgns will not be held liable for the accuracy and will not assume responsibility for any damages resulting from these drawings.

LEGEND

E/P = EX. EDGE OF PAVEMENT	OHF = PROP. OVERHEAD FIBER	PROPOSED ANCHOR & GUY	PROPOSED HANDHOLE
C/L = EX. CENTER LINE	B = PROP. BURIED FIBER	FOREIGN/EXISTING ANCHOR & GUY	EXISTING HANDHOLE
R/W = EX. RIGHT OF WAY	P/L = EX. PROPERTY LINE	AERIAL STORAGE LOOP	STORM DRAIN
		BURIED STORAGE LOOP	FIRE HYDRANT

HORIZ. 1" = 40'
VERT. 1" = 10'

SHEET: 6 OF 22

MOT PLAN: 1550.1 + 1529

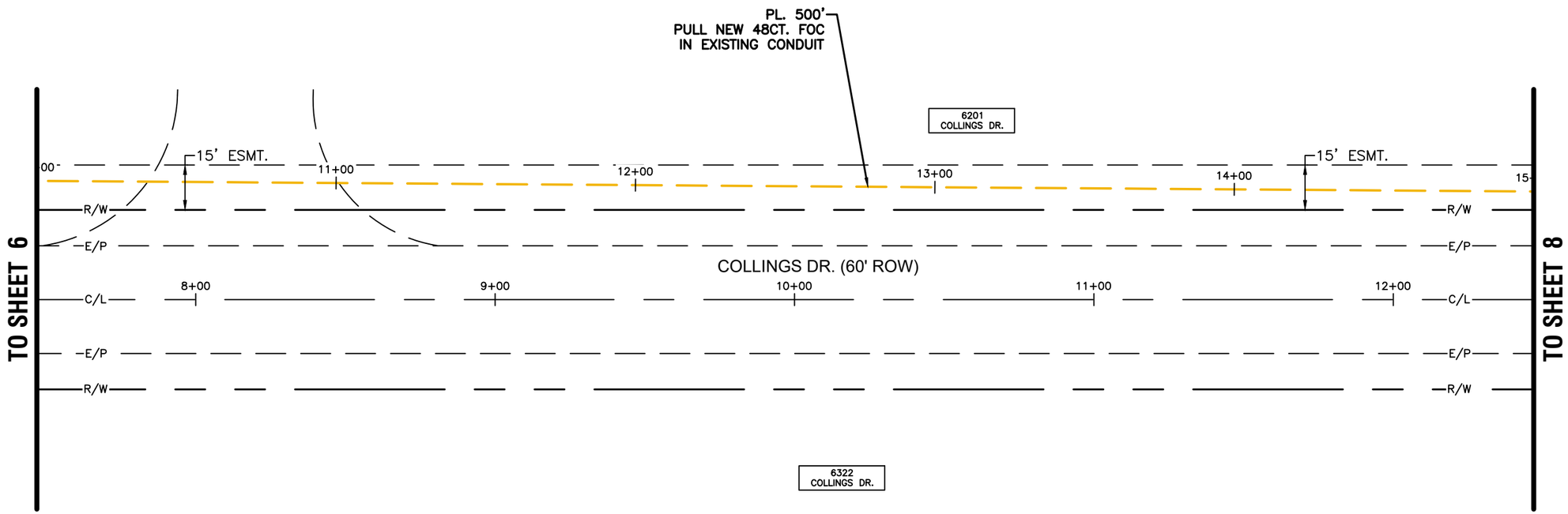

PAGE RATE CARD			
UNIT CODE & DESCRIPTION	UNITS	ESTIMATED QUANTITY	ACTUAL QUANTITY
HANDHOLE 24"X36"X40"	EACH	0	
1-2" HDPE	FT	0	
48CT FOC	FT	500	

CONTRACTOR: SEE PERMIT MOT NOTE #8 a & b – EASEMENTS

LEGEND:

- G — GAS LINE
- -SAN- — SANITARY SEWER
- STM — STORM SEWER
- W — WATER LINE
- S/L — SLUDGE LINE
- E — ELECTRIC
- TR — TRAFFIC
- TRAFFIC SIGNAL POLE
- TRAFFIC PULL BOX
- PEDESTRIAN PEDESTAL

ASBUILT CHANGES / REVISIONS

DATE	DESCRIPTIONS
–	–
–	–
–	–
–	–
–	–

OHIO Utilities Protection SERVICE
Call Before You Dig
1-800-362-2764
OR 8-1-1
CALL TWO WORKING DAYS BEFORE YOU DIG
(NON MEMBERS MUST BE CALLED DIRECTLY)

6040 COLLINGS DR.

DESIGNER: K. KHAY

SCALE BAR = 1:40
0 20 40 60 80

everstream®
FASTER FIBER. BETTER BUSINESS.®

INFORMATION IN THIS DOCUMENT IS PROPRIETARY AND CONFIDENTIAL AND SHALL NOT BE USED, COPIED, REPRODUCED, OR DISCLOSED WITHOUT PRIOR WRITTEN CONSENT OF EVERSTREAM

PLANS PREPARED BY:
NEESAI CAD DESIGNS

Drawing Information: Facility locations are general in nature and are only intended for approximate location reference. Neesai CAD Deisgns will not be held liable for the accuracy and will not assume responsibility for any damages resulting from these drawings.

LEGEND

- E/P = EX. EDGE OF PAVEMENT
- C/L = EX. CENTER LINE
- R/W = EX. RIGHT OF WAY
- OHF = PROP. OVERHEAD FIBER
- B = PROP. BURIED FIBER
- P/L = EX. PROPERTY LINE
- PROPOSED ANCHOR & GUY
- FOREIGN/EXISTING ANCHOR & GUY
- AERIAL STORAGE LOOP
- BURIED STORAGE LOOP
- PROPOSED HANDHOLE
- EXISTING HANDHOLE
- STORM DRAIN
- FIRE HYDRANT

HORIZ. 1" = 40'
VERT. 1" = 10'

SHEET: 7 OF 22

MOT PLAN: 1550.1 + 1529

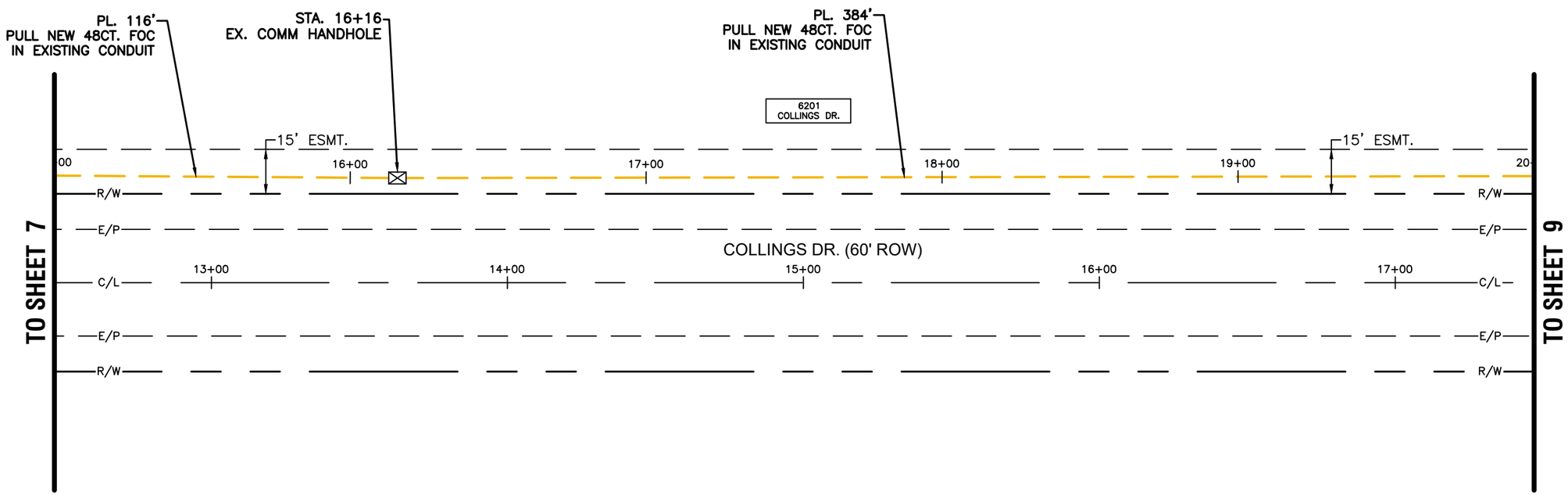

PAGE RATE CARD			
UNIT CODE & DESCRIPTION	UNITS	ESTIMATED QUANTITY	ACTUAL QUANTITY
HANDHOLE 24"X36"X40"	EACH	0	
1-2" HDPE	FT	0	
48CT FOC	FT	500	

CONTRACTOR: SEE PERMIT MOT NOTE #8 a & b – EASEMENTS

LEGEND:

- G — GAS LINE
- -SAN- — SANITARY SEWER
- STM — STORM SEWER
- W — WATER LINE
- S/L — SLUDGE LINE
- E — ELECTRIC
- TR — TRAFFIC
- TRAFFIC SIGNAL POLE
- TRAFFIC PULL BOX
- PEDESTRIAN PEDESTAL

ASBUILT CHANGES / REVISIONS

DATE	DESCRIPTIONS
–	–
–	–
–	–
–	–
–	–

OHIO Utilities Protection SERVICE
Call Before You Dig
1-800-362-2764
OR 8-1-1
CALL TWO WORKING DAYS BEFORE YOU DIG
(NON MEMBERS MUST BE CALLED DIRECTLY)

6040 COLLINGS DR.

DESIGNER: K. KHAY

SCALE BAR = 1:40
0 20 40 60 80

everstream®
FASTER FIBER. BETTER BUSINESS.®

INFORMATION IN THIS DOCUMENT IS PROPRIETARY AND CONFIDENTIAL AND SHALL NOT BE USED, COPIED, REPRODUCED, OR DISCLOSED WITHOUT PRIOR WRITTEN CONSENT OF EVERSTREAM

PLANS PREPARED BY:
NEESAI CAD DESIGNS

Drawing Information: Facility locations are general in nature and are only intended for approximate location reference. Neesai CAD Deisgns will not be held liable for the accuracy and will not assume responsibility for any damages resulting from these drawings.

LEGEND

- E/P = EX. EDGE OF PAVEMENT
- C/L = EX. CENTER LINE
- R/W = EX. RIGHT OF WAY
- OHF = PROP. OVERHEAD FIBER
- B = PROP. BURIED FIBER
- P/L = EX. PROPERTY LINE
- PROPOSED ANCHOR & GUY
- FOREIGN/EXISTING ANCHOR & GUY
- AERIAL STORAGE LOOP
- BURIED STORAGE LOOP
- PROPOSED HANDHOLE
- EXISTING HANDHOLE
- STORM DRAIN
- FIRE HYDRANT

HORIZ. 1" = 40'
VERT. 1" = 10'

MOT PLAN: 1550.1 + 1529

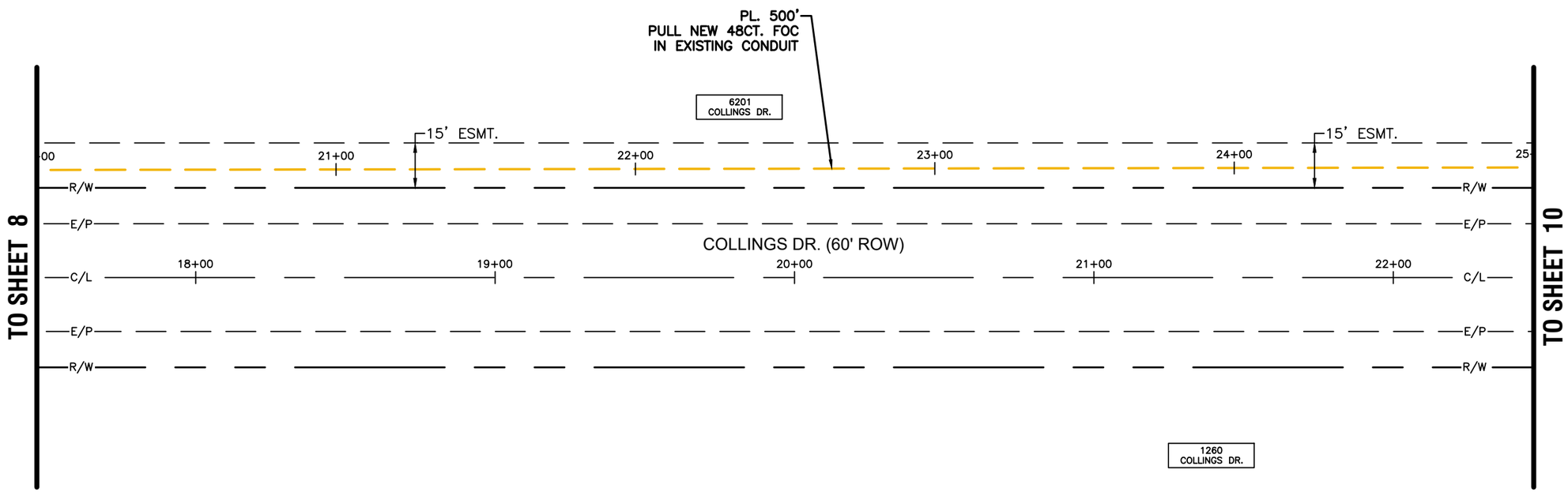

PAGE RATE CARD			
UNIT CODE & DESCRIPTION	UNITS	ESTIMATED QUANTITY	ACTUAL QUANTITY
HANDHOLE 24"X36"X40"	EACH	0	
1-2" HDPE	FT	0	
48CT FOC	FT	500	

CONTRACTOR: SEE PERMIT MOT NOTE #8 a & b – EASEMENTS

LEGEND:

- G — GAS LINE
- -SAN- — SANITARY SEWER
- STM — STORM SEWER
- W — WATER LINE
- S/L — SLUDGE LINE
- E — ELECTRIC
- TR — TRAFFIC
- TRAFFIC SIGNAL POLE
- TRAFFIC PULL BOX
- PEDESTRIAN PEDESTAL

ASBUILT CHANGES / REVISIONS

DATE	DESCRIPTIONS
–	–
–	–
–	–
–	–
–	–

OHIO Utilities Protection SERVICE
Call Before You Dig
1-800-362-2764
OR 8-1-1
CALL TWO WORKING DAYS BEFORE YOU DIG
(NON MEMBERS MUST BE CALLED DIRECTLY)

6040 COLLINGS DR.

DESIGNER: K. KHAY

SCALE BAR = 1:40
0 20 40 60 80

everstream®
FASTER FIBER. BETTER BUSINESS.®

INFORMATION IN THIS DOCUMENT IS PROPRIETARY AND CONFIDENTIAL AND SHALL NOT BE USED, COPIED, REPRODUCED, OR DISCLOSED WITHOUT PRIOR WRITTEN CONSENT OF EVERSTREAM

PLANS PREPARED BY:
NEESAI CAD DESIGNS

Drawing Information: Facility locations are general in nature and are only intended for approximate location reference. Neesai CAD Deisgns will not be held liable for the accuracy and will not assume responsibility for any damages resulting from these drawings.

LEGEND

E/P = EX. EDGE OF PAVEMENT		OHF = PROP. OVERHEAD FIBER	
C/L = EX. CENTER LINE		B = PROP. BURIED FIBER	
R/W = EX. RIGHT OF WAY		P/L = EX. PROPERTY LINE	

PROPOSED ANCHOR & GUY	PROPOSED HANDHOLE
FOREIGN/EXISTING ANCHOR & GUY	EXISTING HANDHOLE
AERIAL STORAGE LOOP	STORM DRAIN
BURIED STORAGE LOOP	FIRE HYDRANT

HORIZ. 1" = 40'
VERT. 1" = 10'

SHEET: 9 OF 22

MOT PLAN: 1550.1 + 1529

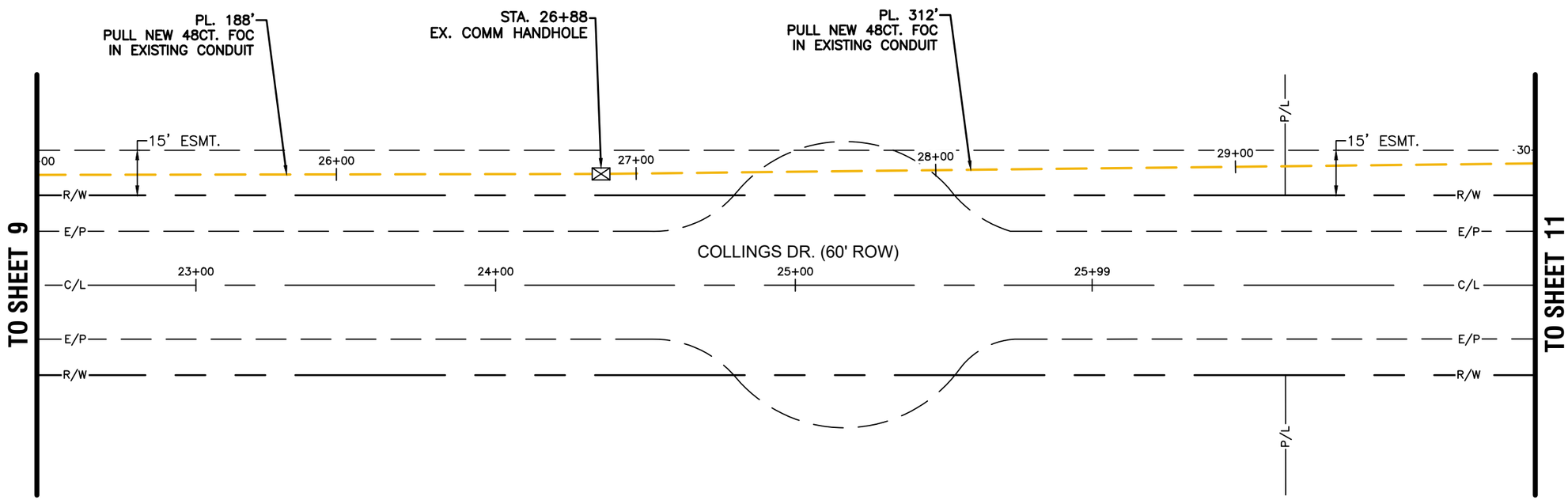

PAGE RATE CARD			
UNIT CODE & DESCRIPTION	UNITS	ESTIMATED QUANTITY	ACTUAL QUANTITY
HANDHOLE 24"X36"X40"	EACH	0	
1-2" HDPE	FT	0	
48CT FOC	FT	500	

CONTRACTOR: SEE PERMIT MOT NOTE #8 a & b – EASEMENTS

LEGEND:

- G — GAS LINE
- -SAN- — SANITARY SEWER
- STM — STORM SEWER
- W — WATER LINE
- S/L — SLUDGE LINE
- E — ELECTRIC
- TR — TRAFFIC
- TRAFFIC SIGNAL POLE
- TRAFFIC PULL BOX
- PEDESTRIAN PEDESTAL

ASBUILT CHANGES / REVISIONS

DATE	DESCRIPTIONS
–	–
–	–
–	–
–	–
–	–

OHIO Utilities Protection SERVICE
Call Before You Dig
1-800-362-2764
OR 8-1-1
CALL TWO WORKING DAYS BEFORE YOU DIG
(NON MEMBERS MUST BE CALLED DIRECTLY)

6040 COLLINGS DR.

DESIGNER: K. KHAY

SCALE BAR = 1:40
0 20 40 60 80

everstream®
FASTER FIBER. BETTER BUSINESS.®

INFORMATION IN THIS DOCUMENT IS PROPRIETARY AND CONFIDENTIAL AND SHALL NOT BE USED, COPIED, REPRODUCED, OR DISCLOSED WITHOUT PRIOR WRITTEN CONSENT OF EVERSTREAM

PLANS PREPARED BY:
NEESAI CAD DESIGNS

Drawing Information: Facility locations are general in nature and are only intended for approximate location reference. Neesai CAD Deisgns will not be held liable for the accuracy and will not assume responsibility for any damages resulting from these drawings.

LEGEND

- E/P = EX. EDGE OF PAVEMENT
- C/L = EX. CENTER LINE
- R/W = EX. RIGHT OF WAY
- OHF = PROP. OVERHEAD FIBER
- B = PROP. BURIED FIBER
- P/L = EX. PROPERTY LINE
- PROPOSED ANCHOR & GUY
- FOREIGN/EXISTING ANCHOR & GUY
- AERIAL STORAGE LOOP
- BURIED STORAGE LOOP
- PROPOSED HANDHOLE
- EXISTING HANDHOLE
- STORM DRAIN
- FIRE HYDRANT

HORIZ. 1" = 40'
VERT. 1" = 10'

SHEET: 10 OF 22

MOT PLAN: 1550.1 + 1529

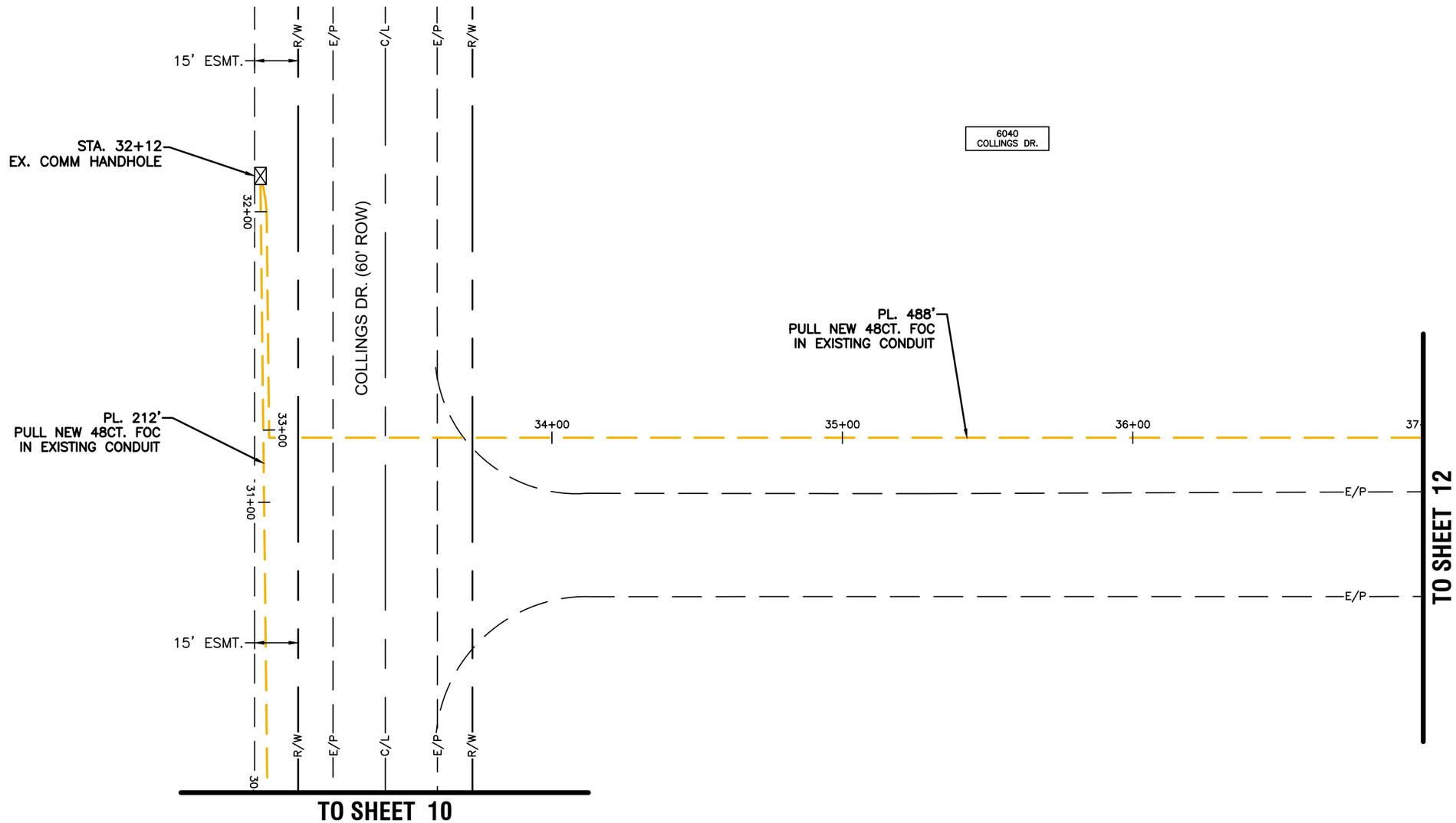

PAGE RATE CARD			
UNIT CODE & DESCRIPTION	UNITS	ESTIMATED QUANTITY	ACTUAL QUANTITY
HANDHOLE 24"X36"X40"	EACH	0	
1-2" HDPE	FT	0	
48CT FOC	FT	600	

N

CONTRACTOR: SEE
PERMIT MOT NOTE #8
a & b – EASEMENTS

LEGEND:

- G — GAS LINE
- -SAN- — SANITARY SEWER
- STM — STORM SEWER
- W — WATER LINE
- S/L — SLUDGE LINE
- E — ELECTRIC
- TR — TRAFFIC
- TRAFFIC SIGNAL POLE
- TRAFFIC PULL BOX
- PEDESTRIAN PEDESTAL

ASBUILT CHANGES / REVISIONS

DATE	DESCRIPTIONS
–	–
–	–
–	–
–	–
–	–
–	–

OHIO Utilities Protection SERVICE
Call Before You Dig
1-800-362-2764
OR 8-1-1
CALL TWO WORKING DAYS BEFORE YOU DIG
(NON MEMBERS MUST BE CALLED DIRECTLY)

6040 COLLINGS DR.

DESIGNER: K. KHAY

SCALE BAR = 1:40
0 20 40 60 80

everstream®
FASTER FIBER. BETTER BUSINESS.®

INFORMATION IN THIS DOCUMENT IS PROPRIETARY AND CONFIDENTIAL AND SHALL NOT BE USED, COPIED, REPRODUCED, OR DISCLOSED WITHOUT PRIOR WRITTEN CONSENT OF EVERSTREAM

PLANS PREPARED BY:
NEESAI CAD DESIGNS

Drawing Information: Facility locations are general in nature and are only intended for approximate location reference. Neesai CAD Deisgns will not be held liable for the accuracy and will not assume responsibility for any damages resulting from these drawings.

LEGEND

- E/P = EX. EDGE OF PAVEMENT
- C/L = EX. CENTER LINE
- R/W = EX. RIGHT OF WAY
- OHF = PROP. OVERHEAD FIBER
- B = PROP. BURIED FIBER
- P/L = EX. PROPERTY LINE
- PROPOSED ANCHOR & GUY
- FOREIGN/EXISTING ANCHOR & GUY
- AERIAL STORAGE LOOP
- BURIED STORAGE LOOP
- PROPOSED HANDHOLE
- EXISTING HANDHOLE
- STORM DRAIN
- FIRE HYDRANT

HORIZ. 1" = 40'
VERT. 1" = 10'

SHEET: 11 OF 22

MOT PLAN: 1550.1 + 1529

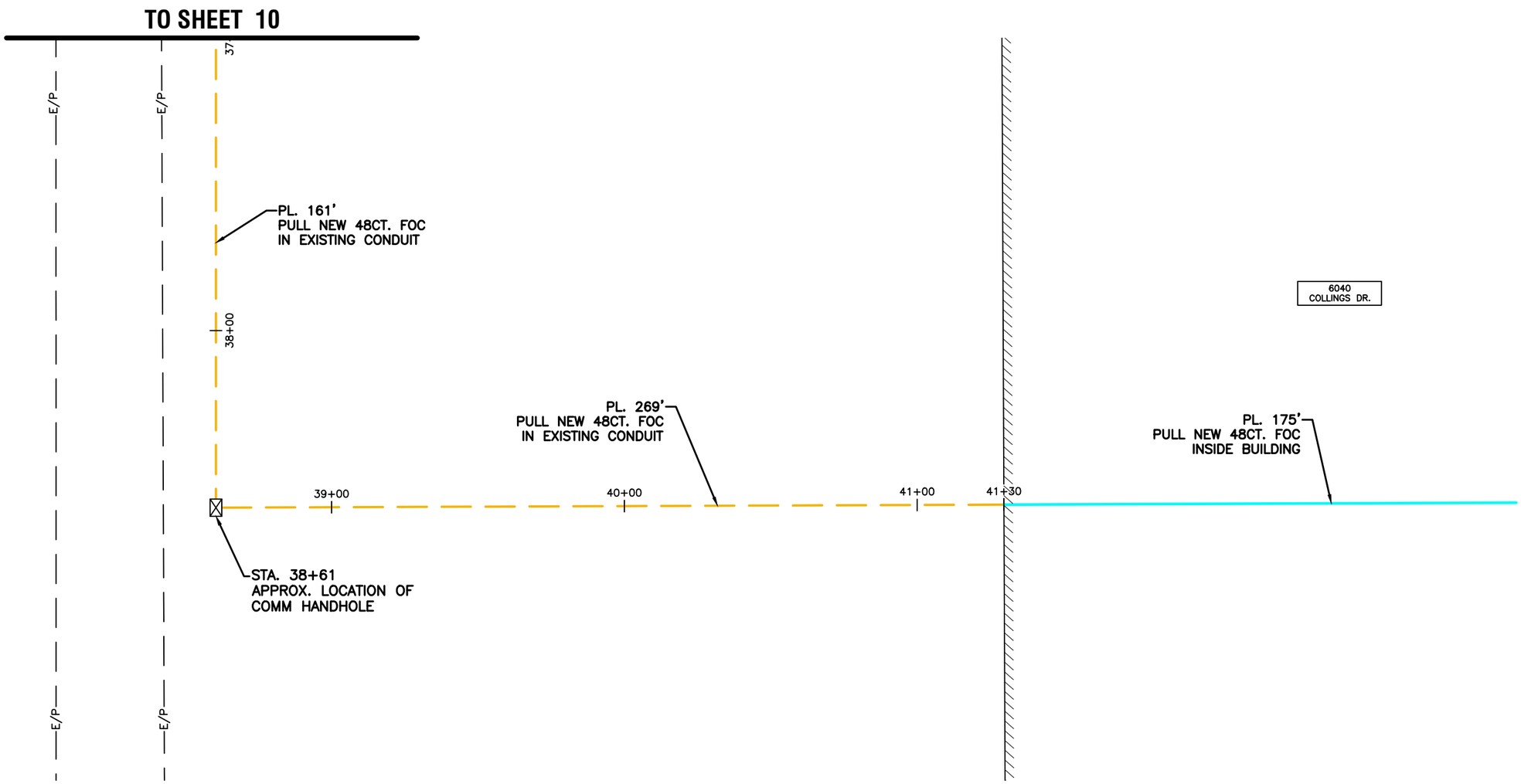

PAGE RATE CARD			
UNIT CODE & DESCRIPTION	UNITS	ESTIMATED QUANTITY	ACTUAL QUANTITY
HANDHOLE 24"X36"X40"	EACH	0	
1-2" HDPE	FT	0	
48CT FOC	FT	605	

CONTRACTOR: SEE
PERMIT MOT NOTE #8
a & b – EASEMENTS

LEGEND:

- G — GAS LINE
- -SAN- — SANITARY SEWER
- STM — STORM SEWER
- W — WATER LINE
- S/L — SLUDGE LINE
- E — ELECTRIC
- TR — TRAFFIC
- TRAFFIC SIGNAL POLE
- TRAFFIC PULL BOX
- PEDESTRIAN PEDESTAL

ASBUILT CHANGES / REVISIONS

DATE	DESCRIPTIONS
–	–
–	–
–	–
–	–
–	–
–	–

OHIO Utilities Protection SERVICE
Call Before You Dig
1-800-362-2764
OR 8-1-1
CALL TWO WORKING DAYS BEFORE YOU DIG
(NON MEMBERS MUST BE CALLED DIRECTLY)

6040 COLLINGS DR.

DESIGNER: K. KHAY

SCALE BAR = 1:40
0 20 40 60 80

everstream®
FASTER FIBER. BETTER BUSINESS.®

INFORMATION IN THIS DOCUMENT IS PROPRIETARY AND CONFIDENTIAL AND SHALL NOT BE USED, COPIED, REPRODUCED, OR DISCLOSED WITHOUT PRIOR WRITTEN CONSENT OF EVERSTREAM

PLANS PREPARED BY:
NEESAI CAD DESIGNS

Drawing Information: Facility locations are general in nature and are only intended for approximate location reference. Neesai CAD Deisgns will not be held liable for the accuracy and will not assume responsibility for any damages resulting from these drawings.

LEGEND

- E/P = EX. EDGE OF PAVEMENT
- C/L = EX. CENTER LINE
- R/W = EX. RIGHT OF WAY
- OHF = PROP. OVERHEAD FIBER
- B = PROP. BURIED FIBER
- P/L = EX. PROPERTY LINE
- PROPOSED ANCHOR & GUY
- FOREIGN/EXISTING ANCHOR & GUY
- AERIAL STORAGE LOOP
- BURIED STORAGE LOOP
- PROPOSED HANDHOLE
- EXISTING HANDHOLE
- STORM DRAIN
- FIRE HYDRANT

HORIZ. 1" = 40'
VERT. 1" = 10'

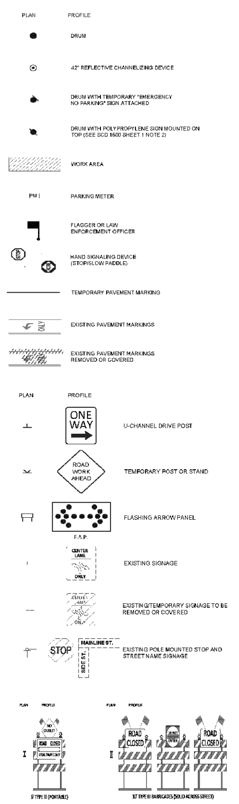

NOTES

1. ADVANCE WARNING SIGNAGE

SIZE: MINIMUM SIGN SIZE IS 36". INCREASE SIZE TO 48" ON ROADWAYS WITH POSTED SPEED EQUAL TO OR GREATER THAN 45 MPH OR ON ARTERIAL ROADWAYS WITH 4 LANES OR MORE. ONE-WAY STREETS REQUIRE SIGNS POSTED ON BOTH SIDES OF ROADWAY.

SPACING: SPACING BETWEEN SIGNS IS 100' FOR SPEEDS LESS THAN OR EQUAL TO 40 MPH AND 350' FOR SPEEDS GREATER THAN OR EQUAL TO 45 MPH PER TABLE 2: ADVANCE WARNING SIGNS. FIRST SIGN IN SERIES IS PLACED 100' OR 350' PRIOR TO THE FIRST DRUM OR DEVICE. MAINTAIN 200' CLEARANCE FROM EXISTING SIGNAGE WHENEVER POSSIBLE. INSTALL TYPE A LOW INTENSITY FLASHING LIGHTS ON SIGNS AS DIRECTED BY THE OMUTCD PART 6 SECTION 6F-83, CURRENT EDITION. WHEN TEMPORARY TRAFFIC CONTROL DEVICES ARE USED FOR NIGHTTIME ROADWAY AND PEDESTRIAN MAINTENANCE OF TRAFFIC CONTROL SETUPS.

CONFLICTING SIGNS: REMOVE OR COVER EXISTING SIGNS LOCATED WITHIN 250' OF FIRST WARNING SIGN AND ALL CONFLICTING SIGNS WITHIN WORK ZONE. END ROAD WORK SIGNS, G-20-2, SHALL ONLY BE USED WHEN CONSTRUCTION EXCEEDS 180 DAYS, AS WHEN SHOWN IN A ROADWAY MAINTENANCE OF TRAFFIC PLAN, OR AS DIRECTED BY THE ENGINEER.

2. CHANNELIZING DEVICES

DRUMS: DRUMS SHALL HAVE TYPE C OR TYPE D 360 DEGREE STEADY BURN WARNING LIGHTS FOR USE AT NIGHT. DURING DAYTIME OPERATIONS 42" CHANNELIZING DEVICES MAY BE SUBSTITUTED FOR DRUMS WITH THE PERMISSION OF THE ENGINEER.

DEVICE SPACING: 40' ON TANGENTS, 20' TAPERS, 6' TO 8' ON RADII 10' MINIMUM LANE WIDTHS SHALL BE MAINTAINED. A MINIMUM OF 5 DRUMS SHALL BE USED TO CLOSE THE UPSTREAM SHOULDER.

DRUM MOUNTED SIGNS: CONTRACTOR MAY USE A POLYPROPYLENE FLUTED SHEET FOR SIGNING WHEN PLACING ON TOP OF DRUMS. SIGNS SHALL BE ATTACHED TO THE DRUMS USING APPROPRIATE HARDWARE. ONLY "KEEP RIGHT", "ONE-WAY", AND TURN RESTRICTION SIGNS SHALL BE POSTED ON TOP OF DRUMS.

ALL SIGNS SHALL MAINTAIN RETROREFLECTIVITY. SIGN SUBSTRATE SHALL CONFORM TO FHWA SIGN SUBSTRATES FOR PLASTIC DRUMS AND WORK ZONE ACCEPTANCE LETTER WZ-45 "CRASHWORTHY WORK ZONE DEVICES" AS OF OCTOBER 1, 2000.

3. TAPER LENGTHS

TAPER LENGTH CRITERIA FOR TEMPORARY TRAFFIC CONTROL ZONES SHALL BE PER TABLE 1: TAPER LENGTHS FOR TEMPORARY TRAFFIC CONTROL ZONE FOR CALCULATED TAPER LENGTHS.

EXIT TAPERS SHALL BE 100' PER LANE, MAXIMUM.

4. TEMPORARY MARKINGS

WHEN LANE CLOSURES EXCEED 14 CALENDAR DAYS, TEMPORARY MARKINGS (740.06) TAPE, MINIMUM 4'-0" LONG SEGMENTS SHALL BE INSTALLED FOR ALL CENTERLINES, CHANNELS, AND LANE LINES. CONFLICTING MARKINGS SHALL BE COVERED WITH NON-REFLECTIVE TAPE OR REMOVED. ITEM 642 PAINT SHALL BE USED IF AN AREA IS TO BE MILLED AND/OR RESURFACED OR PLACED ON THE INTERMEDIATE ASPHALT COURSE.

5. GENERAL NOTES AND MODIFICATIONS OF STANDARD CONSTRUCTION DRAWINGS

THE USE OF ANY MAINTENANCE OF TRAFFIC STANDARD DRAWING SHALL REQUIRE A MAINTENANCE OF TRAFFIC TABLE PROVIDED BY THE DIVISION OF DESIGN AND CONSTRUCTION. MODIFICATIONS TO THE TEMPORARY TRAFFIC CONTROL STANDARD CONSTRUCTION DRAWINGS MAY OCCUR WHEN FIELD CONDITIONS DICTATE THAT THE APPLICATION OF THE STANDARD DRAWING DOES NOT MEET ITS INTENDED PURPOSE. ONLY THE ENGINEER MAY DEVIATE FROM THESE DRAWINGS.

6. SCD 1500 REFERENCE

ALL NOTES, TABLES, FIGURES, AND LEGENDS INCLUDED AS PART OF SCD 1500 ARE TO BE APPLIED TO ALL OTHER MAINTENANCE OF TRAFFIC SCD (1501-1599).

TABLE 1: TAPER LENGTHS FOR TEMPORARY TRAFFIC CONTROL ZONES †

D: TAPER RATE (SHOULDER) CLOSURE OMUTCD 0.33L = WS²/60					0.33L = WS			
WIDTH OF SHOULDER	25 MPH	30 MPH	35 MPH	40 MPH	45 MPH	50 MPH	55 MPH	60 MPH
6'	*	*	*	53'	89'	99'	109'	119'
7'	*	*	47'	62'	104'	116'	127'	139'
8'	*	*	54'	70'	119'	132'	145'	158'
9'	*	45'	61'	79'	134'	149'	163'	178'
10'	*	50'	67'	88'	149'	165'	182'	198'
11'	*	54'	74'	97'	163'	182'	200'	218'
12'	*	59'	81'	106'	178'	198'	218'	238'
E: TAPER RATE (MERGE) CLOSURE OMUTCD L = WS²/60					L = WS			
WIDTH OF LANE CLOSED	25 MPH	30 MPH	35 MPH	40 MPH	45 MPH	50 MPH	55 MPH	60 MPH
10'	104'	150'	204'	267'	450'	500'	550'	600'
11'	115'	165'	225'	293'	495'	550'	605'	660'
12'	125'	180'	245'	320'	540'	600'	660'	720'
13'	135'	195'	265'	347'	585'	650'	715'	780'
F: TAPER RATE (SHIFT) CLOSURE OMUTCD 0.5L = WS²/60					L = WS			
WIDTH OF LANE SHIFT	25 MPH	30 MPH	35 MPH	40 MPH	45 MPH	50 MPH	55 MPH	60 MPH
10'	52'	75'	102'	133'	450'	500'	550'	600'
11'	57'	83'	112'	147'	495'	550'	605'	660'
12'	62'	90'	123'	160'	540'	600'	660'	720'
13'	68'	98'	133'	173'	585'	650'	715'	780'

NOTES:
1. WHEN PAVED SHOULDERS ARE CLOSED IN CONJUNCTION WITH A RIGHT LANE CLOSURE OR SHIFT ADD SHOULDER WIDTH TO LANE WIDTH TO CALCULATE TAPER LENGTH.
2. FOR PAVED SHOULDERS UNDER 6' USE 40 TAPER LENGTH.
3. L = TAPER LENGTH, W = WIDTH OF OFFSET, S = POSTED SPEED LIMIT OR 85TH PERCENTILE SPEED
* = 40'

† TABLE DERIVED FROM OMUTCD, CURRENT EDITION, PART 6, TABLES 6C-3 AND 6C-4

TABLE 2: ADVANCE WARNING SIGNS ‡

ROAD TYPE	DISTANCE BETWEEN SIGNS ** A	B	C
URBAN (LOW SPEED*) ≤ 40 MPH	100 FT	100 FT	100 FT
URBAN (HIGH SPEED*) ≥ 45 MPH	350 FT	350 FT	350 FT
RURAL	500 FT	500 FT	500 FT
EXPRESSWAY/FREEWAY	1,000 FT	1,500 FT	2,640 FT

‡ FROM OMUTCD, CURRENT EDITION, PART 6 TABLE 6C-1

* SPEED CATEGORY DETERMINED BY THE CITY OF COLUMBUS TO BE LOW SPEED (POSTED SPEED LIMIT LESS THAN OR EQUAL TO 40MPH) OR HIGH SPEED (POSTED SPEED LIMIT GREATER THAN OR EQUAL TO 45MPH)

**THE COLUMN HEADINGS 'A', 'B', 'C', 'D', 'E', AND 'F' ARE THE DIMENSIONS SHOWN IN STANDARD DRAWINGS AND ARE DEFINED AS:

'A' = THE DISTANCE FROM THE TRANSITION OR POINT OF RESTRICTION TO THE FIRST SIGN (CLOSEST TO THE TTC ZONE).
'B' = THE 'B' DIMENSION IS THE DISTANCE BETWEEN THE FIRST AND SECOND SIGN.
'C' = DIMENSION IS THE DISTANCE BETWEEN THE SECOND AND THIRD SIGN (FURTHEST UPSTREAM FROM THE TTC ZONE).
'D' = SHOULDER TAPER LENGTH.
'E' = MERGE TAPER LENGTH.
'F' = SHIFT TAPER LENGTH.

TABLE 3: TANGENT LENGTHS FOR TEMPORARY TRAFFIC CONTROL ZONES ʎ

ROAD TYPE	ZONE SETUP	
LOW SPEED < 40 MPH	BETWEEN MERGE AND SHIFT TAPERS	(½)L = WS²
HIGH SPEED > 45 MPH	BETWEEN MERGE AND SHIFT TAPERS	L = WS
LOW SPEED < 40 MPH	BETWEEN 2 MERGE TAPERS	L = WS²
HIGH SPEED > 45 MPH	BETWEEN 2 MERGE TAPERS	2L = WS

ʎ TANGENT SECTION LENGTHS MAY BE CHANGED BY ENGINEER.

TYPICAL ADV. WARNING SIGNS FOR BIKE LANE CLOSURES

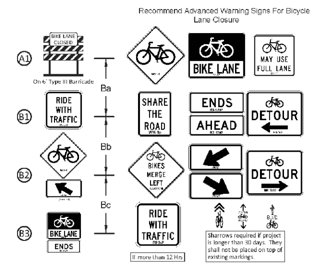

TABLE 4: BIKES LANE CLOSURE SIGN SPACING

ROAD TYPE	DISTANCE BETWEEN SIGNS ** Ba	Bb	Bc
URBAN (LOW SPEED*) ≤ 40 MPH	50'min-100' max	50'min-100' max	50'min-100' max
URBAN (HIGH SPEED*) ≥ 45 MPH	100'min 200' max	100'min 200' max	100'min 200' max

TYPICAL SIDEWALK CLOSURE / PEDESTRIAN DETOUR SIGNS

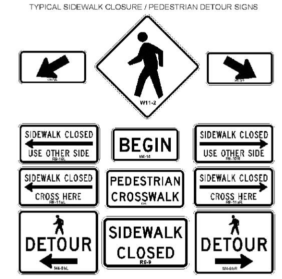

PERMIT MOT SHT 1500

MAINTENANCE OF TRAFFIC GENERAL NOTES	
CITY OF COLUMBUS, OHIO DEPARTMENT OF PUBLIC SERVICE DIVISION OF DESIGN AND CONSTRUCTION	STD DWG 1500
Preliminary	2022
rcpennington	SHEETS 1, 2 & 3

Sidewalk Closure and Pedestrian Diversion Applications

Standards: 1. When crosswalks or other pedestrian facilities are closed or relocated temporary facilities shall be detectable and shall include accessibility features consistent with the features present in the existing pedestrian facility.
Guidance: 2. Where high speeds are anticipated, a temporary traffic barrier and, if necessary, a crash cushion should be used to separate the temporary sidewalks from vehicular traffic.
3. Audible information devices should be considered where mid-block closings and changed crosswalk areas cause inadequate communication to be provided to pedestrians who have visual disabilities.
Options: a. Street lighting may be considered.
b. Only the TTC devices related to pedestrians are shown. Other devices, such as lane closure signing or ROAD WORK AHEAD signs may be used to control vehicular traffic.
c. For night time closures, Type A Flashing warning light may be used on barricades that support signs and close sidewalks.
d. Type C Steady-Burn or Type D 360-Degree Steady-Burn warning lights may be used on channelizing devices separating the temporary sidewalks from vehicular traffic flow.
e. Signs, such as KEEP RIGHT (LEFT), may be placed along a temporary sidewalk to guide or direct pedestrians.

* City of Columbus, Permit MOT Review does not recommend the use of Temporary Pedestrian Crosswalks (TPC) for short term work zones. Should a TPC be required the double yellow center line and lane lines must be concealed or removed between the crosswalk lines.

Reference:
FWHA MUTCD Tables 6H-2 and 6H-3 for the meaning of the symbols and / or letter codes used in these figures.

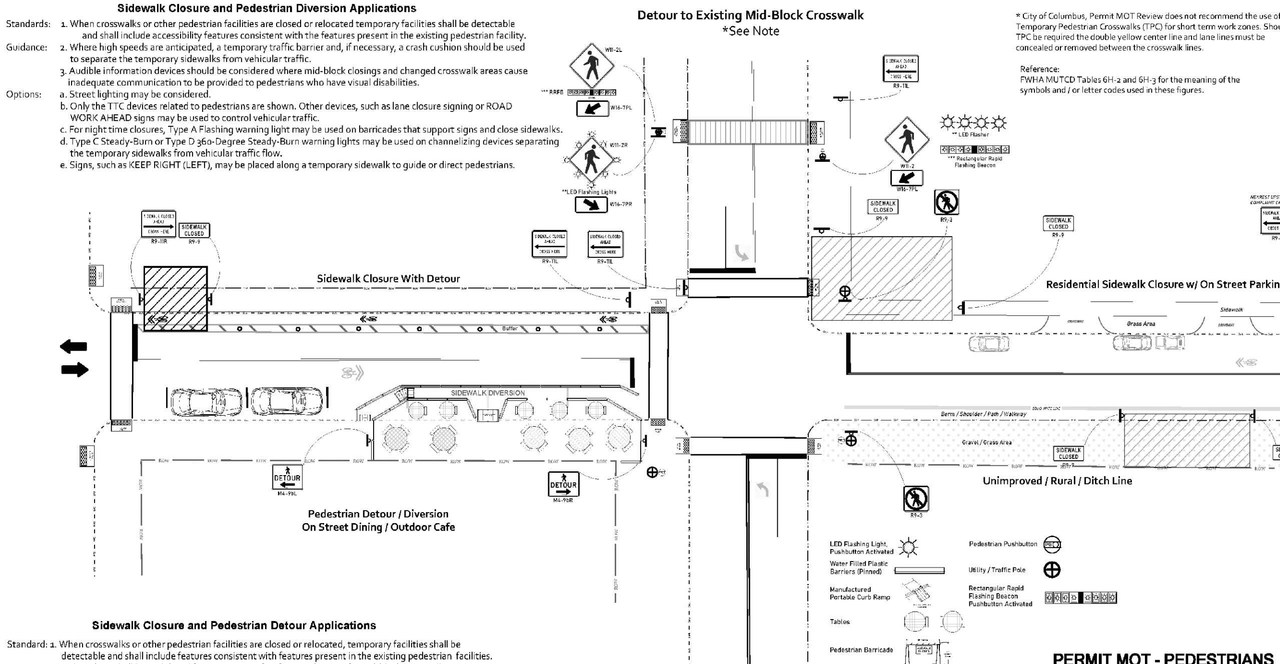

Sidewalk Closure and Pedestrian Detour Applications

Standard: 1. When crosswalks or other pedestrian facilities are closed or relocated, temporary facilities shall be detectable and shall include features consistent with features present in the existing pedestrian facilities.
2. Curb parking shall be prohibited for a minimum of 50 feet in advance of a mid-block crosswalk.

Guidance: 1. Audible information devices should be considered where mid-block closings and changed crosswalk areas cause inadequate communication to be provided to pedestrians who have visual disabilities.
2. Pedestrian traffic signal displays controlling closed crosswalks should be covered or deactivated.

Options: a. Street lighting may be considered.
b. Only TTC devices related to pedestrians are shown. Other devices, such as lane closure signing or ROAD WORK AHEAD signs may be used to control vehicular traffic.
c. Type C Steady-Burn or Type D 360-degree Steady-Burn warning lights may be used in channelizing devices separating the work area from vehicular traffic.
d. In order to maintain systematic use of florescent yellow-green background for pedestrian, bicycle and school warning signs in a jurisdiction, the fluorescent yellow-green background for pedestrian, bicycle and school warning signs may be used in TTC zones.

City of Columbus Permit MOT Policy
"Sidewalks" are defined as ANY area within the Right Of Way used by pedestrians.
SHALL NOT - Close Opposing Sidewalks or Crosswalks Simultaneously.
SHALL - Place Sidewalk Closed (R9-9) signs on each end of the Work Zone
SHALL - Place Pedestrian Detour signs at nearest ADA Compliant crosswalk beyond the Work Zone.

Sidewalk Closure, Detour & Diversion (TA-28, TA-29) are based on FHWA'S MUTCD 2023 Edition Revised for Columbus Permit MOT Plans

PERMIT MOT - PEDESTRIANS

SIDEWALK CLOSURE DETOUR & DIVERSION	
CITY OF COLUMBUS, OHIO DEPARTMENT OF PUBLIC SERVICE DIVISION OF DESIGN AND CONSTRUCTION	STD DWG 1529
Preliminary	03/06/2024
rcpennington	SHEET 1 / 1

PERMIT MOT NOTES

https://www.columbus.gov/publicservice/Design-and-Construction/Document-Library/

1. PERMIT MOT / TTC - SUBMITTAL

a.STANDARD DRAWINGS - ONLY COLUMBUS 1500-1550 WILL BE ACCEPTED FOR USE MOT / TTC ON PERMITS.

b.SITE SPECIFIC
REQUIRED - WHEN WORK ZONE IMPACTS A SIGNALIZED INTERSECTION.
REQUIRED - WHEN WORK AREA IN THE CENTRAL BUSINESS DISTRICT.
REQUIRED - WHEN REQUESTED BY MOT PERMIT REVIEW.
REQUIRED - LAW ENFORCEMENT OFFICER (LEO) AT SIGNALIZED INTERSECTIONS.

2. MASS TRANSIT AND RIDE SHARE

a.COTA BUS STOPS
SHALL CONTACT PRIOR TO START - PAUL EVANS - COTA SERVICE PROGRAM MANAGER (614) 308-4373 evanspm1@cota.com.
THIRTY DAYS - ANY CLOSURE WHICH CREATES DELAY OR DETOUR ON ASSIGNED ROUTES REQUIRES A TEMPORARY RELOCATION.
24 HOURS - PRIOR TO START OF CONSTRUCTION WITHIN 300' OF COTA ASSETS IN THE RIGHT OF WAY.
IMMEDIATELY - IN EVENT OF UNPLANNED WORK AFFECTING COTA BUS STOPS.

b.COTA ASSETS
SHALL CONTACT PRIOR TO START - PAUL EVANS - COTA SERVICE PROGRAM MANAGER (614) 308-4373 evanspm1@cota.com.
SHALL KEEP OPEN ALL STOPS & STATIONS IN WORK ZONE IF RELOCATION IS NOT REQUIRED BY COTA PROGRAM SERVICES MANAGER.

c.COGO - RIDE SHARE BIKE CHARGING STATIONS
SHALL CONTACT PRIOR TO START - CHET RIDENOUR - COGO BIKE SHARE OPERATIONS MANAGER (614) 506-8100 cridenour@lyft.com.
THIRTY DAYS - IF CLOSURE IMPACTS COGO BIKE STATION, LIMITS PUBLIC ACCESS DURING CONSTRUCTION.
24 HOURS - PRIOR TO START OF CONSTRUCTION WITHIN 300' OF COGO ASSETS.
IMMEDIATELY - IN EVENT OF UNPLANNED WORK AFFECTING COGO/LIFT ASSETS

3. BIKES AND PEDESTRIANS

a.BIKE LANE CLOSURE
WHEN A BIKE LANE PAVEMENT MARKING EXIST AND MUST BE INCLUDED IN THE MOT / TTC PLAN.
REFERENCE - MOT SHEET 1500 ADVANCE WARNING SIGNS WHEN CLOSING THE BIKE LANE AND MERGING BIKES.
REFERENCE - MOT SHEET 1500 TABLE 4 ADVANCE WARNING SIGN SPACING.
REQUIRED - ONE (1) SHARE THE ROAD SIGN MID-TAPER WHEN NO BIKE LANE BUT SHARROWS ONLY EXIST.

b.SIDEWALKS / CROSSWALKS
THE CONTRACTOR:
SHALL NOT CLOSE OPPOSING SIDEWALKS OR CROSSWALKS SIMULTANEOUSLY.
SHALL KEEP SIDEWALKS & CROSSWALKS BEYOND THE ACTIVE WORK AREA OPEN AT ALL TIMES.
SHALL PLACE R9-9 SIGNS EACH END OF THE ACTIVE WORK AREA.
SHALL PLACE R9-11 SIGNS AT THE NEAREST ADA CROSSWALKS BEYOND THE ACTIVE WORK AREA.

Note: "Sidewalks" defined ANY area within the right of way used by pedestrians.

4. PARKING

a.DRIVEWAYS
THE CONTRACTOR:
SHALL PROVIDE 72 HOURS ADVANCE NOTICE WHEN CLOSING DRIVEWAYS.
SHALL RESTORE ACCESS FOLLOWING END OF WORK THAT DAY AND MAINTAIN AREA IN COMPLIANCE WITH ADA REQUIREMENTS.
SHALL MONITOR OBSTRUCTED DRIVEWAYS AND RESPONSIBLE TO MAINTAIN ACCESS AS NEEDED.

b.ON STREET
THE CONTRACTOR:
SHALL CONTACT PARKING ENFORCEMENT (614) 645-4072 48 HOURS IN ADVANCE WHEN CLOSING METERED/APP PAY PARKING.
SHALL LIMIT PARKING RESTRICTIONS TO "AS NEEDED" TO SAFELY COMPLETE THE WORK.
SHALL PROVIDE 72 HOURS ADVANCE NOTICE TO RESIDENTS WHEN TEMPORARILY CLOSING ON STREET PARKING AREAS.
SHALL RESTORE ACCESS FOLLOWING END OF EACH WORK DAY.
SHALL MAINTAIN LANE WIDTH SUFFICIENT FOR VEHICLES TO SAFELY PASS THROUGH WORK AREA.
SHALL MONITOR AND ASSIST PERMITTED HANDICAP PARKING SPACES AS DEFINED BY THE ADA.

5. ADVANCE WARNING SIGNS

a.SIGNS, SIZES, SPACING, DISTANCE
THE CONTRACTOR:
SHALL PLACE SIGNS ON INTERSECTING STREETS WHEN NO ADVANCED WARNING SIGN IS SEEN PRIOR TO ENTERING THE WORK AREA.

b.SIZES < 40 MPH "LOW SPEED" AND 36" x 36 SHOULD BE USED.

c.SIZES > 45 MPH "HIGH SPEED" AND 48" x 48" SHOULD BE USED.

d.SPACING PER MOT SHEET 1500 TABLE 2.

e.DISTANCE VARIES WHEN TURN ONLY LANES EXIST. THE SPACE FROM STOP BAR TO TURN LANE PAVEMENT MARKINGS ORIGIN, CONTINUE PER TABLE 2.

6. TMC - SIGNAL TIMING, CAMERA MONITORING AND RECORDING

a.CITY OF COLUMBUS TMC - TRAFFIC MANAGEMENT CENTER (614) 645-7249

b.SIGNALS - TIMING CHANGES MAY BE REQUESTED BY SPECIAL DUTY LAW ENFORCEMENT OFFICER (LEO).

c.CAMERAS - MONITORING AND RECORDING MUST BE ARRANGED 72 HOURS IN ADVANCE.

7. SHOULDER CLOSURES

THE CONTRACTOR:
SHALL NOT OCCUPY, BLOCK OR IMPEDE A LANE OF TRAVEL (LOT) WHILE USING A SHOULDER CLOSURE PER 6H-3 MODIFIED
SHALL PERFORM WORK BEYOND THE EDGE OF PAVEMENT (EOP), SOLID WHITE LINE (SWL), LANE OF TRAVEL (LOT), OR BACK OF CURB (BOC).
SHALL MAINTAIN A BUFFER, SAFE DISTANCE FROM THE SWL FOR TRAFFIC CONTROL DEVICE PLACEMENT ON EOP, SWL OR LOT.
SHALL PLACE R9-9 & R9-11 SIGNS FOR SIDEWALK CLOSURE & PEDESTRIAN DETOURS PER TYPICAL 6H29 FOR PEDESTRIAN SAFETY.
SHALL SECURE PERMISSION IN ADVANCE TO PARK, STORE, STAGE & SITE ACCESS.

NOTES:
a. DEFINITIONS: Edge of Pavement (EOP), Back of Curb (BOC), Face of Curb (FOC), Solid White Line (SWL), Lane of Travel (LOT)

b. Work Zone - Equipment, Staging & Storage is prohibited within 2' of the EOP, SWL, and LOT.
Traffic Conditions - Must remain normal when deploying shoulder closures.
Separation - A 2' Buffer between the work zone and lane of travel must be maintained.
Compliance - If not in compliance with the above MOT Approval is REVOKED. Cease and Contact the MOT Supervisor immediately (614) 645-0355.

8. EASEMENTS

a.EASEMENT ACCESS WITHIN PUBLIC RIGHT OF WAY
THE CONTRACTOR:
SHALL DEPLOY TRAFFIC CONTROL WHEN STAGING, STORAGE AND ACCESSING EASEMENTS.
SHALL DEPLOY PEDESTRIAN SAFETY MEASURES.

b.NOTES - Typical 1550.1 Traffic Control Plan when Accessing Easements Follow the Guidance Above

ASBUILT CHANGES / REVISIONS

DATE	DESCRIPTIONS
—	—
—	—
—	—
—	—
—	—

OHIO Utilities Protection SERVICE
Call Before You Dig
1-800-362-2764
OR 8-1-1
CALL TWO WORKING DAYS BEFORE YOU DIG
(NON MEMBERS MUST BE CALLED DIRECTLY)

6040 COLLINGS DR.

DESIGNER: K. KHAY

everstream®
FASTER FIBER. BETTER BUSINESS.®

INFORMATION IN THIS DOCUMENT IS PROPRIETARY AND CONFIDENTIAL AND SHALL NOT BE USED, COPIED, REPRODUCED, OR DISCLOSED WITHOUT PRIOR WRITTEN CONSENT OF EVERSTREAM

PLANS PREPARED BY:
NEESAI CAD DESIGNS

Drawing Information: Facility locations are general in nature and are only intended for approximate location reference. Neesai CAD Deisgns will not be held liable for the accuracy and will not assume responsibility for any damages resulting from these drawings.

LEGEND

Symbol		Description
E/P	=	EX. EDGE OF PAVEMENT
C/L	=	EX. CENTER LINE
R/W	=	EX. RIGHT OF WAY
OHF	=	PROP. OVERHEAD FIBER
B	=	PROP. BURIED FIBER
P/L	=	EX. PROPERTY LINE

PROPOSED ANCHOR & GUY
FOREIGN/EXISTING ANCHOR & GUY
AERIAL STORAGE LOOP
BURIED STORAGE LOOP
PROPOSED HANDHOLE
EXISTING HANDHOLE
STORM DRAIN
FIRE HYDRANT

SCALE: NONE

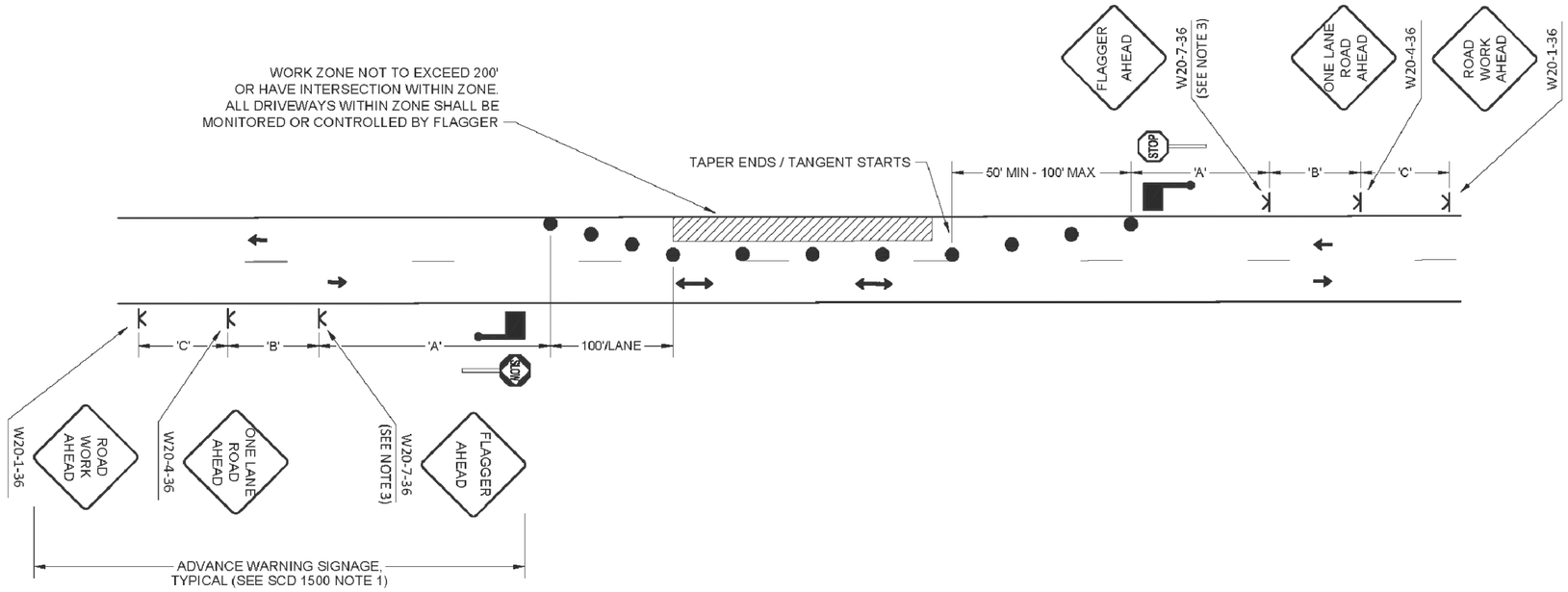

NOTES

1. FOR ADDITIONAL NOTES, TABLES, AND SYMBOL LEGEND SEE CITY OF COLUMBUS STANDARD CONSTRUCTION DRAWING 1500.
2. ON STRAIGHT ROADWAYS WITH SHORT WORK ZONES (50') IN LOW VOLUME SITUATIONS, WHERE THE FLAGGER IS VISIBLE TO ROAD USERS FROM BOTH DIRECTIONS, A SINGLE FLAGGER VISIBLY POSITIONED TO ROAD USERS APPROACHING FROM BOTH DIRECTIONS MAY BE USED.
3. NO SYMBOLS, TEXT ONLY.
4. FLAGGER USING STOP/SLOW PADDLE - SEE OMUTCD SECTION 6E.03.

TWO-WAY, ONE-LANE

FLAGGING OPERATIONS

CITY OF COLUMBUS, OHIO
DEPARTMENT OF PUBLIC SERVICE
DIVISION OF DESIGN AND CONSTRUCTION

CITY ENGINEER

STD DWG
1550
9/15/2015
SHT 1 OF 3

ASBUILT CHANGES / REVISIONS

DATE	DESCRIPTIONS
–	–
–	–
–	–
–	–
–	–
–	–

OHIO Utilities Protection SERVICE
Call Before You Dig
1-800-362-2764
OR 8-1-1
CALL TWO WORKING DAYS BEFORE YOU DIG
(NON MEMBERS MUST BE CALLED DIRECTLY)

6040 COLLINGS DR.

DESIGNER: K. KHAY

SCALE BAR = 1:80
0 40 80 120 160

everstream®
FASTER FIBER. BETTER BUSINESS.®

INFORMATION IN THIS DOCUMENT IS PROPRIETARY AND CONFIDENTIAL AND SHALL NOT BE USED, COPIED, REPRODUCED, OR DISCLOSED WITHOUT PRIOR WRITTEN CONSENT OF EVERSTREAM

PLANS PREPARED BY:
NEESAI CAD DESIGNS

Drawing Information: Facility locations are general in nature and are only intended for approximate location reference. Neesai CAD Deisgns will not be held liable for the accuracy and will not assume responsibility for any damages resulting from these drawings.

LEGEND

E/P = EX. EDGE OF PAVEMENT		OHF = PROP. OVERHEAD FIBER	
C/L = EX. CENTER LINE		B = PROP. BURIED FIBER	
R/W = EX. RIGHT OF WAY		P/L = EX. PROPERTY LINE	

PROPOSED ANCHOR & GUY	PROPOSED HANDHOLE
FOREIGN/EXISTING ANCHOR & GUY	EXISTING HANDHOLE
AERIAL STORAGE LOOP	STORM DRAIN
BURIED STORAGE LOOP	FIRE HYDRANT

SCALE: 1" = 80'

SHEET: 14 OF 22

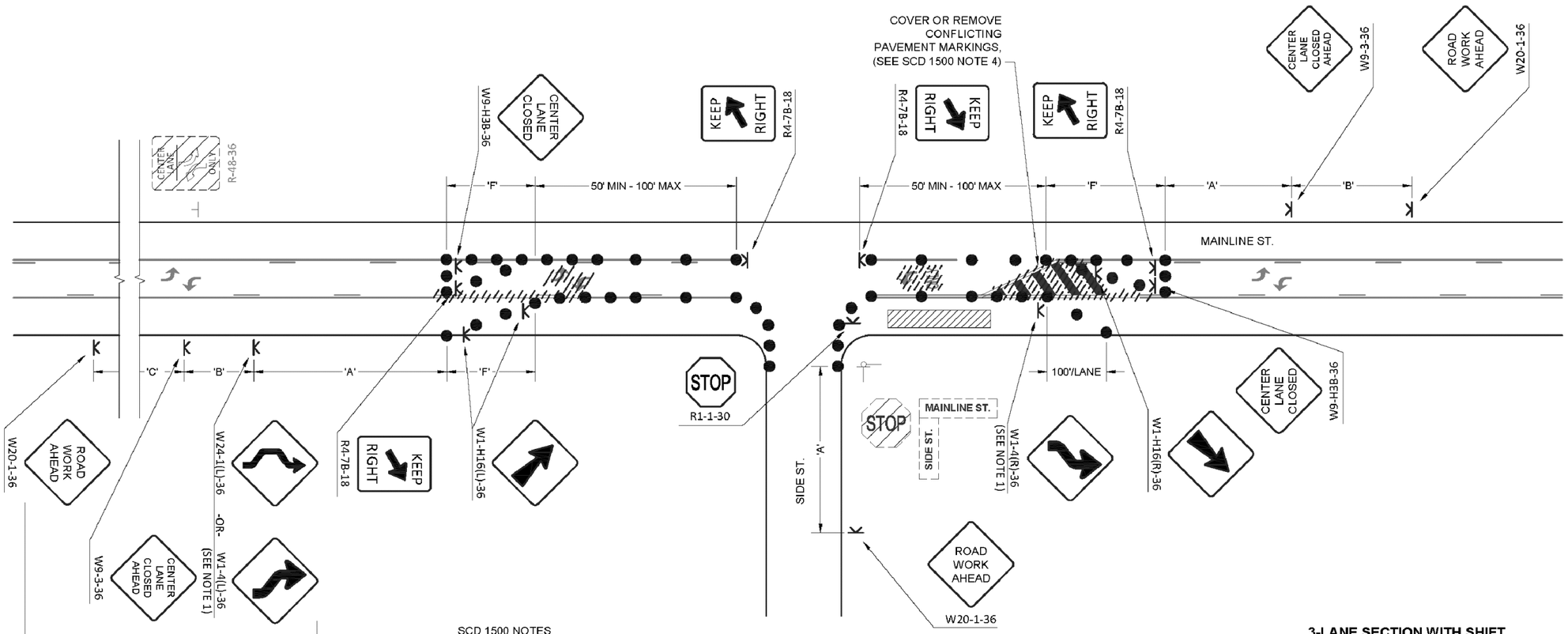

SCD 1500 NOTES

1A. SEE SCD 1500 NOTE 3. TAPER LENGTHS ARE TO BE CALCULATED USING FORMULAS FROM THE SCD 1500, TABLE 1: TAPER LENGTHS FOR TEMPORARY TRAFFIC CONTROL ZONES.

NOTES

1. IF TANGENT DISTANCE ALONG THE TEMPORARY DIVERSION IS LESS THAN 540', A DOUBLE REVERSE CURVE SIGN (W24-1) SHOULD BE USED IN PLACE OF INITIAL REVERSE CURVE SIGN AND THE SECOND REVERSE CURVE SIGN SHALL BE OMITTED.

2. FOR ADVANCE WARNING SIGN ON SIDE STREET APPLICATION PLACE SIGN A MAXIMUM OF 200' FROM STOP LINE OR TRAFFIC CONTROL.

3-LANE SECTION WITH SHIFT

LANE CLOSURES

CITY OF COLUMBUS, OHIO
DEPARTMENT OF PUBLIC SERVICE
DIVISION OF DESIGN AND CONSTRUCTION

CITY ENGINEER

STD DWG 1510

9/15/2015

SHT 3 OF 5

ASBUILT CHANGES / REVISIONS

DATE	DESCRIPTIONS
–	–
–	–
–	–
–	–
–	–

OHIO Utilities Protection SERVICE
Call Before You Dig
1-800-362-2764
OR 8-1-1
CALL TWO WORKING DAYS BEFORE YOU DIG
(NON MEMBERS MUST BE CALLED DIRECTLY)

6040 COLLINGS DR.

DESIGNER: K. KHAY

SCALE BAR = 1:80
0 40 80 120 160

everstream®
FASTER FIBER. BETTER BUSINESS.®

INFORMATION IN THIS DOCUMENT IS PROPRIETARY AND CONFIDENTIAL AND SHALL NOT BE USED, COPIED, REPRODUCED, OR DISCLOSED WITHOUT PRIOR WRITTEN CONSENT OF EVERSTREAM

PLANS PREPARED BY:
NEESAI CAD DESIGNS

Drawing Information: Facility locations are general in nature and are only intended for approximate location reference. Neesai CAD Designs will not be held liable for the accuracy and will not assume responsibility for any damages resulting from these drawings.

LEGEND

E/P	EX. EDGE OF PAVEMENT	OHF	PROP. OVERHEAD FIBER
C/L	EX. CENTER LINE	B	PROP. BURIED FIBER
R/W	EX. RIGHT OF WAY	P/L	EX. PROPERTY LINE

PROPOSED ANCHOR & GUY	PROPOSED HANDHOLE
FOREIGN/EXISTING ANCHOR & GUY	EXISTING HANDHOLE
AERIAL STORAGE LOOP	STORM DRAIN
BURIED STORAGE LOOP	FIRE HYDRANT

SCALE: 1" = 80'

SHEET: 15 OF 22

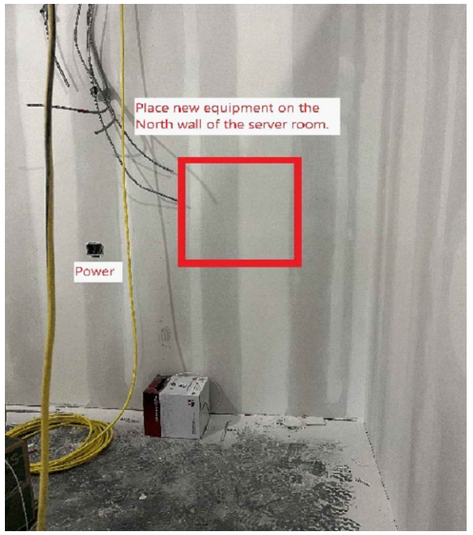

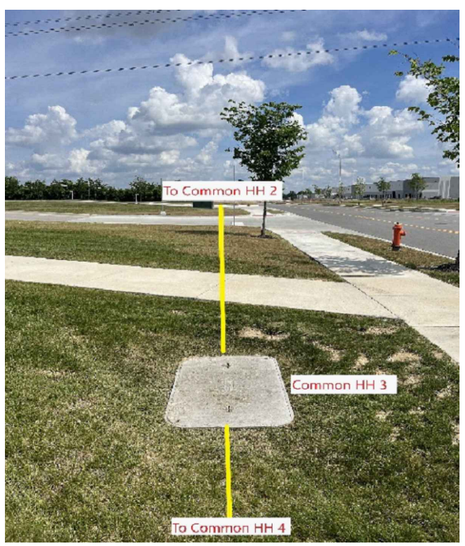

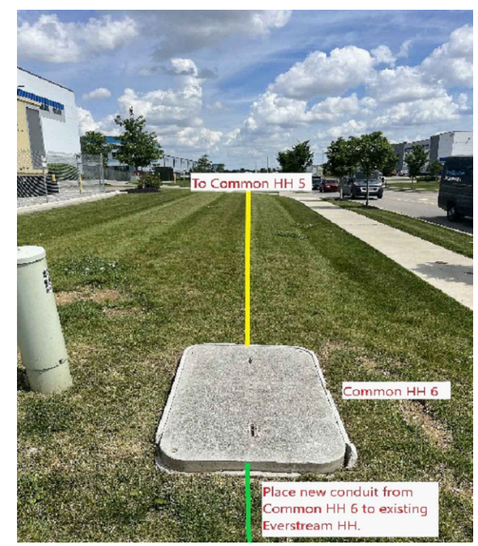

ASBUILT CHANGES / REVISIONS

DATE	DESCRIPTIONS
–	–
–	–
–	–
–	–
–	–

OHIO Utilities Protection SERVICE
Call Before You Dig
1-800-362-2764
OR 8-1-1
CALL TWO WORKING DAYS BEFORE YOU DIG
(NON MEMBERS MUST BE CALLED DIRECTLY)

6040 COLLINGS DR.

DESIGNER: K. KHAY

SCALE BAR = 1:80
0 40 80 120 160

everstream®
FASTER FIBER. BETTER BUSINESS.®

INFORMATION IN THIS DOCUMENT IS PROPRIETARY AND CONFIDENTIAL AND SHALL NOT BE USED, COPIED, REPRODUCED, OR DISCLOSED WITHOUT PRIOR WRITTEN CONSENT OF EVERSTREAM

PLANS PREPARED BY:
NEESAI CAD DESIGNS

Drawing Information: Facility locations are general in nature and are only intended for approximate location reference. Neesai CAD Designs will not be held liable for the accuracy and will not assume responsibility for any damages resulting from these drawings.

LEGEND

E/P = EX. EDGE OF PAVEMENT		OHF = PROP. OVERHEAD FIBER	
C/L = EX. CENTER LINE		B = PROP. BURIED FIBER	
R/W = EX. RIGHT OF WAY		P/L = EX. PROPERTY LINE	

PROPOSED ANCHOR & GUY	PROPOSED HANDHOLE
FOREIGN/EXISTING ANCHOR & GUY	EXISTING HANDHOLE
AERIAL STORAGE LOOP	STORM DRAIN
BURIED STORAGE LOOP	FIRE HYDRANT

SCALE: 1" = 80'

SHEET: 16 OF 22

4' x 4' x 4' FIBERGLASS MANHOLE DETAILS

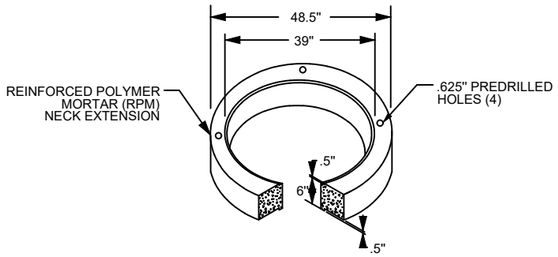

TYPICAL DETAIL - A
NECK EXTENSION

NOTES:
1. EACH COVER TO HAVE (4) PICK SLOTS FOR REMOVING.
2. STAMP "CAPROCK" IN COVER.
3. ACCESS HOLE: 30".

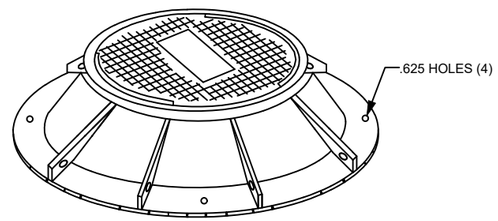

TYPICAL DETAIL - B
MANHOLE COVER
WESTERN IRONWORKS #B=30

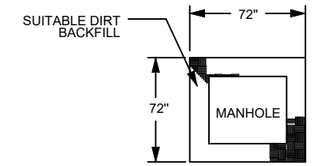

TYPICAL DETAIL - C
EXCAVATION PIT
PLAN VIEW

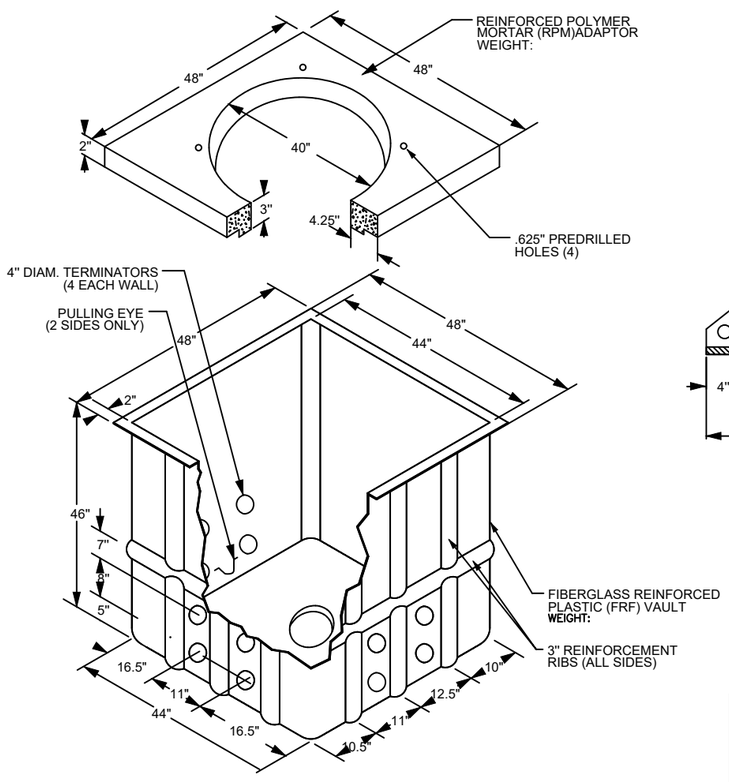

TYPICAL DETAIL - D
MANHOLE ADAPTOR

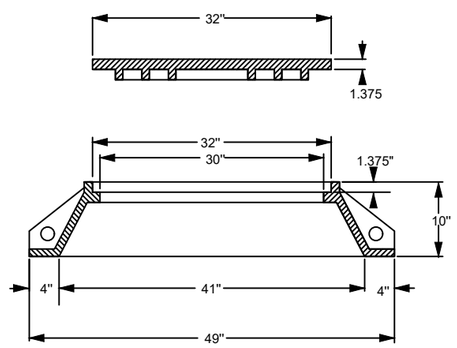

TYPICAL DETAIL - E
RING & COVER DETAIL
RING: 390lbs. COVER: 300lbs.

NOTES:
1. VOID IN EXCAVATED AREAS TO BE BACKFILLED WITH SELECT MATERIAL.
2. BOTTOM OF EXCAVATED PIT TO BE BACKFILLED WITH 12" OF CRUSHED STONE (3/4" GRADE).
3. SHORING WILL BE REQUIRED.
4. ALL MANHOLES SHALL BE PLACED WITH COVER FLUSH WITH EXISTING GRADE.

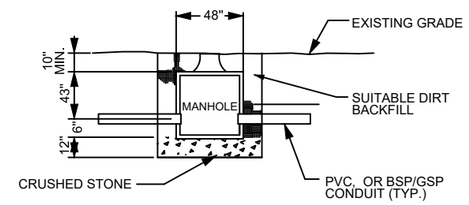

TYPICAL DETAIL - F
EXCAVATION PIT
PROFILE VIEW

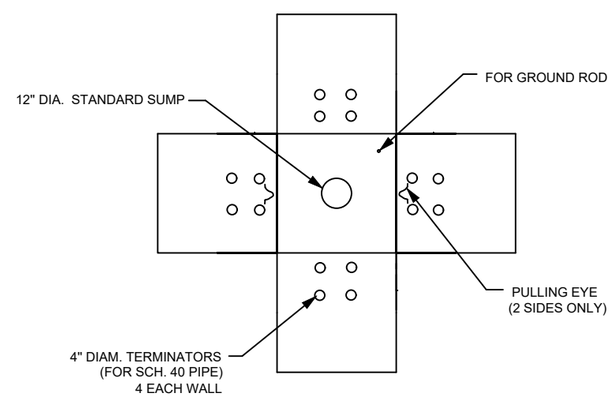

TYPICAL DETAIL - G
4' x 4' x 4' MANHOLE
PLAN VIEW

ASBUILT CHANGES / REVISIONS

DATE	DESCRIPTIONS
–	–
–	–
–	–
–	–
–	–

OHIO Utilities Protection SERVICE
Call Before You Dig
1-800-362-2764
OR 8-1-1
CALL TWO WORKING DAYS BEFORE YOU DIG
(NON MEMBERS MUST BE CALLED DIRECTLY)

6040 COLLINGS DR.

DESIGNER: K. KHAY

everstream®
FASTER FIBER. BETTER BUSINESS.®

INFORMATION IN THIS DOCUMENT IS PROPRIETARY AND CONFIDENTIAL AND SHALL NOT BE USED, COPIED, REPRODUCED, OR DISCLOSED WITHOUT PRIOR WRITTEN CONSENT OF EVERSTREAM

PLANS PREPARED BY:
NEESAI CAD DESIGNS

Drawing Information: Facility locations are general in nature and are only intended for approximate location reference. Neesai CAD Deisgns will not be held liable for the accuracy and will not assume responsibility for any damages resulting from these drawings.

LEGEND

E/P = EX. EDGE OF PAVEMENT	OHF = PROP. OVERHEAD FIBER	PROPOSED ANCHOR & GUY	PROPOSED HANDHOLE
C/L = EX. CENTER LINE	B = PROP. BURIED FIBER	FOREIGN/EXISTING ANCHOR & GUY	EXISTING HANDHOLE
R/W = EX. RIGHT OF WAY	P/L = EX. PROPERTY LINE	AERIAL STORAGE LOOP	STORM DRAIN
		BURIED STORAGE LOOP	FIRE HYDRANT

SCALE: NONE

SHEET: 17 OF 22

4' x 4' x 4' POLYMER CONCRETE MANHOLE DETAILS

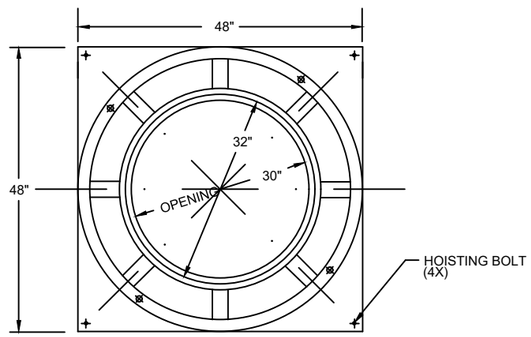

TYPICAL DETAIL - A

MANHOLE TOP VIEW

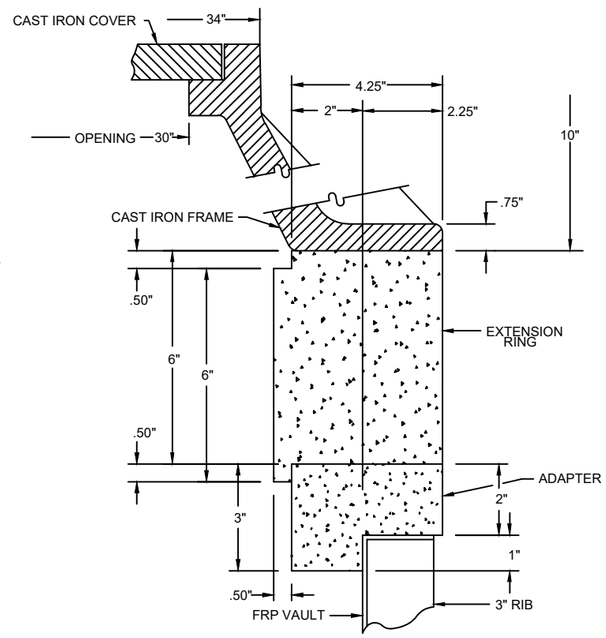

TYPICAL DETAIL - B

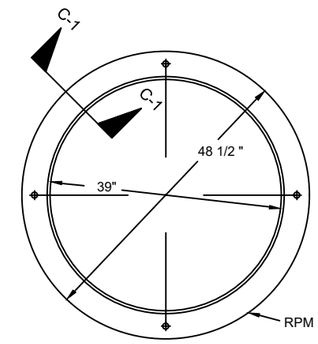

TYPICAL DETAIL - C

EXTENSION RING

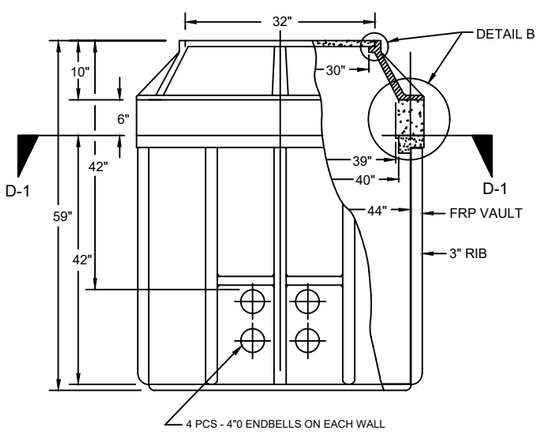

TYPICAL DETAIL - D

MANHOLE FRONT VIEW

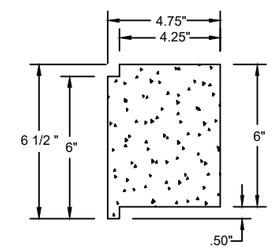

TYPICAL DETAIL - C-1

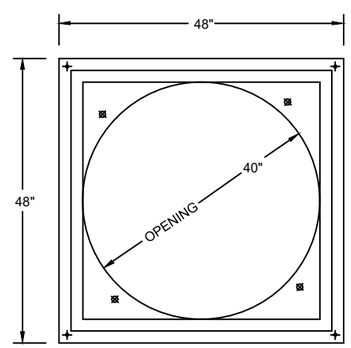

TYPICAL DETAIL - D-1

ADAPTER TOP VIEW

NOTES:

1. USE ARMORCASE POLYMER CONCRETE MANHOLE OR EQUIVALENT.

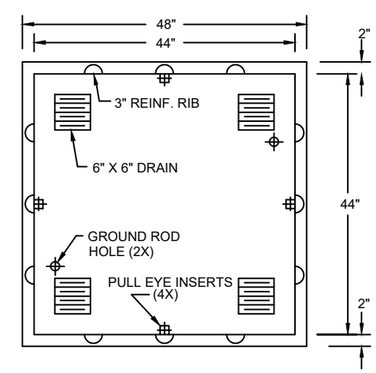

TYPICAL DETAIL - E

VAULT TOP VIEW

ASBUILT CHANGES / REVISIONS

DATE	DESCRIPTIONS
–	–
–	–
–	–
–	–
–	–
–	–

OHIO Utilities Protection SERVICE

Call Before You Dig

1-800-362-2764

OR 8-1-1

CALL TWO WORKING DAYS BEFORE YOU DIG (NON MEMBERS MUST BE CALLED DIRECTLY)

6040 COLLINGS DR.

DESIGNER: K. KHAY

everstream®

FASTER FIBER. BETTER BUSINESS.®

INFORMATION IN THIS DOCUMENT IS PROPRIETARY AND CONFIDENTIAL AND SHALL NOT BE USED, COPIED, REPRODUCED, OR DISCLOSED WITHOUT PRIOR WRITTEN CONSENT OF EVERSTREAM

PLANS PREPARED BY:

NEESAI CAD DESIGNS

Drawing Information: Facility locations are general in nature and are only intended for approximate location reference. Neesai CAD Deisgns will not be held liable for the accuracy and will not assume responsibility for any damages resulting from these drawings.

LEGEND

E/P = EX. EDGE OF PAVEMENT	OHF = PROP. OVERHEAD FIBER	PROPOSED ANCHOR & GUY	PROPOSED HANDHOLE
C/L = EX. CENTER LINE	B = PROP. BURIED FIBER	FOREIGN/EXISTING ANCHOR & GUY	EXISTING HANDHOLE
R/W = EX. RIGHT OF WAY	P/L = EX. PROPERTY LINE	AERIAL STORAGE LOOP	STORM DRAIN
		BURIED STORAGE LOOP	FIRE HYDRANT

SCALE: NONE

SHEET: 18 OF 22

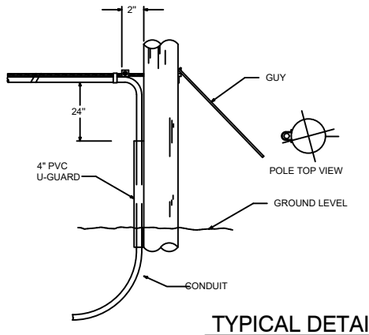

NOTES:

1. EXTEND U-GUARD MIN. 6" BELOW GROUND LEVEL
2. FOR CONDUIT PL. U-GUARD BELOW SURFACE TO CONDUIT ADAPTER.
3. USE STEEL CONDUIT OR U-GUARD FROM BOTTOM OF POLE UP 10'.

TYPICAL DETAIL - A

POLE ARRANGEMENT FOR AERIAL TO BURIED CABLE

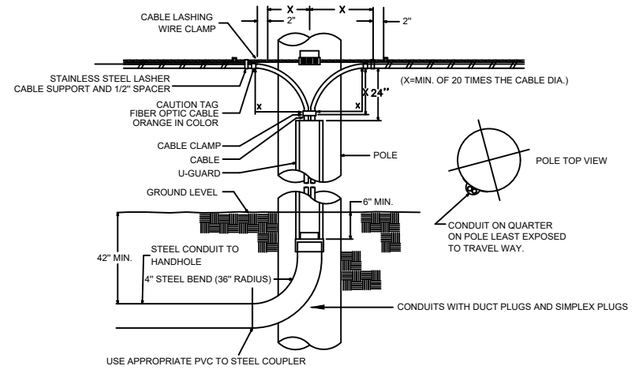

TYPICAL DETAIL - B

POLE ARRANGEMENT FOR REPEATER
OR HANDHOLE LOCATION

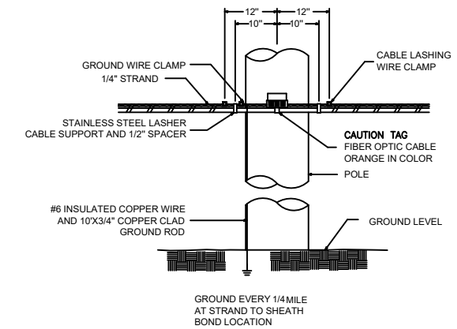

TYPICAL DETAIL - C

TYPICAL CABLE & HARDWARE INSTALLATION
(1/4" STRAND)

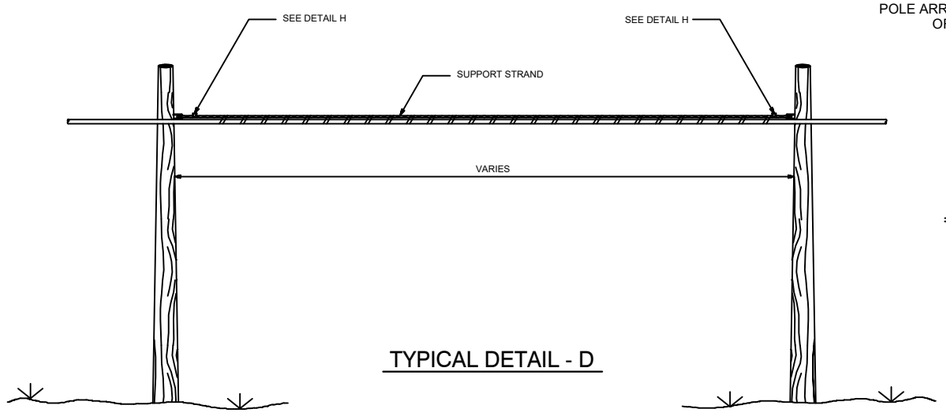

TYPICAL DETAIL - D

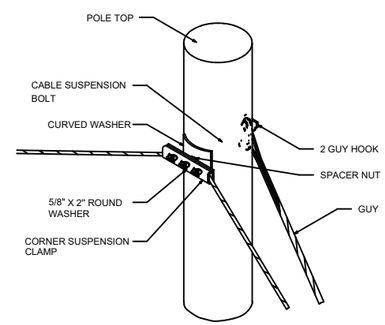

TYPICAL DETAIL - E

SUSPENSION STRAND - PULL AWAY
FROM POLE - 5 FEET OR MORE

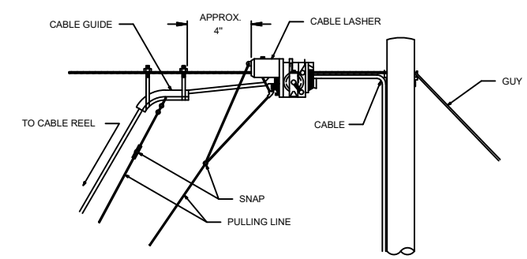

TYPICAL DETAIL - F

TYPICAL ARRANGEMENT OF
CABLE LASHER AND CABLE GUIDE

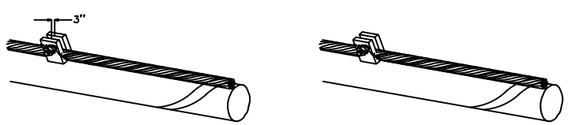

REMOVE ANY SLACK IN THE LASHING WIRE BY MAINTAINING A PULL ON THE WIRE AND TAPPING THE STRAND SHARPLY. THEN FORM THE WIRE OVER THE STUD AND TIGHTEN THE NUT. CUT THE FREE END OF THE LASHING WIRE OFF 3/4" BEYOND THE END OF THE CLAMP.

FORMING WIRE OVER STUD OF CLAMP

FORM THE LASHING WIRE AROUND THE STRAND AND PLACE IT BELOW THE STUD AND BETWEEN THE SECOND WASHER AND STUD SHOULDER.

FORMING LASHING WIRE AROUND STRAND

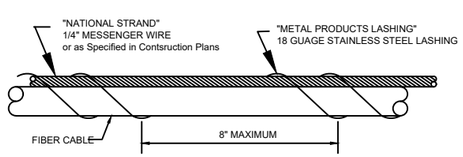

TYPICAL DETAIL - G

JOINING 045 LASHING WIRE

C LASHING WIRE GRIP INSTALLED ON STRAND

D CABLE LASHING CLAMP

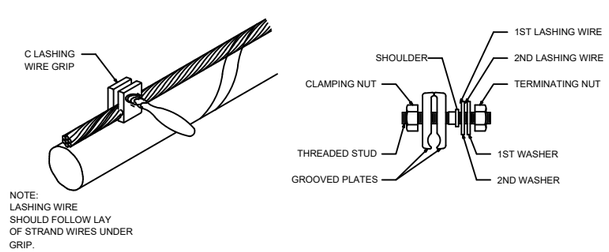

NOTE:
LASHING WIRE
SHOULD FOLLOW LAY
OF STRAND WIRES UNDER
GRIP.

TYPICAL DETAIL - H

LASHING WIRE GRIP AND CLAMP

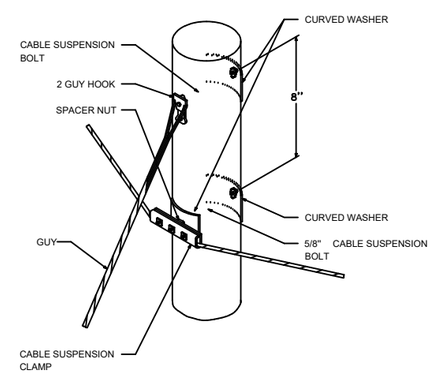

TYPICAL DETAIL - I

SUSPENSION STRAND - PULL TOWARD
POLE - LESS THAN 5 FEET

ASBUILT CHANGES / REVISIONS

DATE	DESCRIPTIONS
–	–
–	–
–	–
–	–
–	–
–	–
–	–

OHIO Utilities Protection SERVICE
Call Before You Dig
1-800-362-2764
OR 8-1-1
CALL TWO WORKING DAYS BEFORE YOU DIG
(NON MEMBERS MUST BE CALLED DIRECTLY)

6040 COLLINGS DR.

DESIGNER: K. KHAY

everstream®
FASTER FIBER. BETTER BUSINESS.®

INFORMATION IN THIS DOCUMENT IS PROPRIETARY AND CONFIDENTIAL AND SHALL NOT BE USED, COPIED, REPRODUCED, OR DISCLOSED WITHOUT PRIOR WRITTEN CONSENT OF EVERSTREAM

PLANS PREPARED BY:
NEESAI CAD DESIGNS

Drawing Information: Facility locations are general in nature and are only intended for approximate location reference. Neesai CAD Deisgns will not be held liable for the accuracy and will not assume responsibility for any damages resulting from these drawings.

LEGEND

E/P	= EX. EDGE OF PAVEMENT	OHF	= PROP. OVERHEAD FIBER		PROPOSED ANCHOR & GUY		PROPOSED HANDHOLE
C/L	= EX. CENTER LINE	B	= PROP. BURIED FIBER		FOREIGN/EXISTING ANCHOR & GUY		EXISTING HANDHOLE
R/W	= EX. RIGHT OF WAY	P/L	= EX. PROPERTY LINE		AERIAL STORAGE LOOP		STORM DRAIN
					BURIED STORAGE LOOP		FIRE HYDRANT

SCALE: NONE

SHEET: 19 OF 22

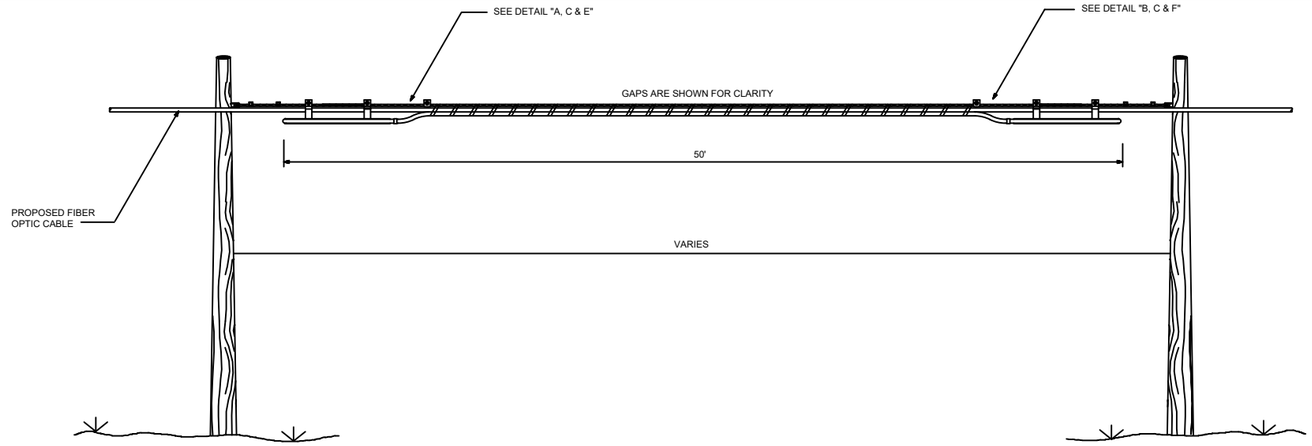

TYPICAL DETAIL FOR STORING CABLE SLACK

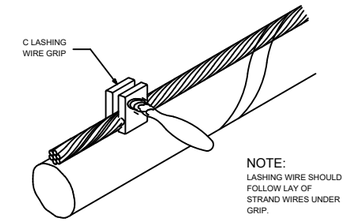

TYPICAL DETAIL - C

LASHING WIRE GRIP AND CLAMP
C LASHING WIRE GRIP INSTALLED ON STRAND

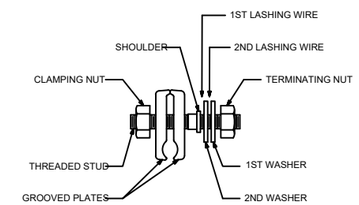

TYPICAL DETAIL - D

CABLE LASHING CLAMP

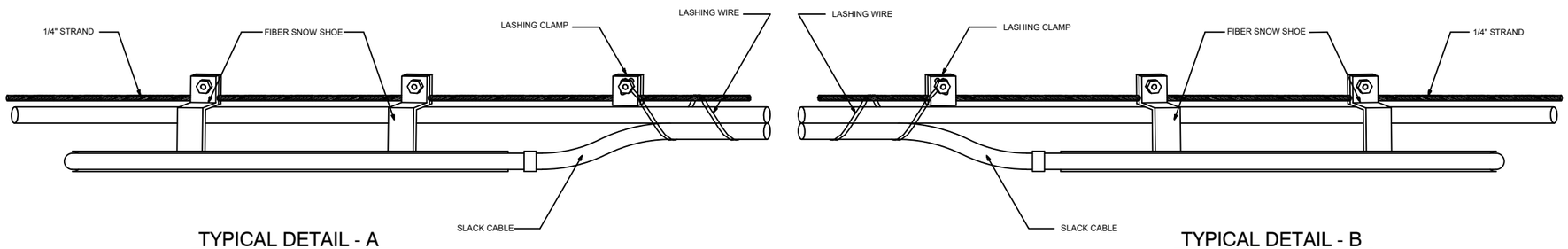

TYPICAL DETAIL - A

TYPICAL DETAIL - B

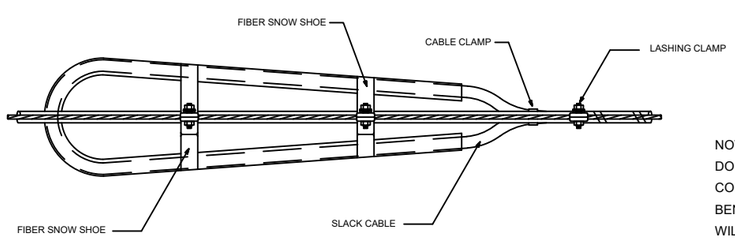

TYPICAL DETAIL - E

NOTE:
DO NOT EXCEED THE MANUFACTURERS SPECIFICATIONS CONCERNING MINIMUM BENDING RADIUS. THE MINIMUM BENDING RADIUS OF FIBER OPTIC CABLE UNDER TENSION WILL NOT EXCEED 20 TIMES THE CABLE DIAMETER.

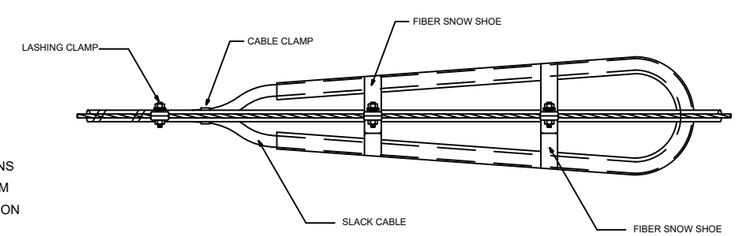

TYPICAL DETAIL - F

ASBUILT CHANGES / REVISIONS

DATE	DESCRIPTIONS
–	–
–	–
–	–
–	–
–	–

OHIO Utilities Protection SERVICE
Call Before You Dig
1-800-362-2764
OR 8-1-1
CALL TWO WORKING DAYS BEFORE YOU DIG
(NON MEMBERS MUST BE CALLED DIRECTLY)

6040 COLLINGS DR.

DESIGNER: K. KHAY

everstream®
FASTER FIBER. BETTER BUSINESS.®

INFORMATION IN THIS DOCUMENT IS PROPRIETARY AND CONFIDENTIAL AND SHALL NOT BE USED, COPIED, REPRODUCED, OR DISCLOSED WITHOUT PRIOR WRITTEN CONSENT OF EVERSTREAM

PLANS PREPARED BY:
NEESAI CAD DESIGNS

Drawing Information: Facility locations are general in nature and are only intended for approximate location reference. Neesai CAD Deisgns will not be held liable for the accuracy and will not assume responsibility for any damages resulting from these drawings.

LEGEND

E/P = EX. EDGE OF PAVEMENT		OHF = PROP. OVERHEAD FIBER	
C/L = EX. CENTER LINE		B = PROP. BURIED FIBER	
R/W = EX. RIGHT OF WAY		P/L = EX. PROPERTY LINE	

PROPOSED ANCHOR & GUY	PROPOSED HANDHOLE
FOREIGN/EXISTING ANCHOR & GUY	EXISTING HANDHOLE
AERIAL STORAGE LOOP	STORM DRAIN
BURIED STORAGE LOOP	FIRE HYDRANT

SCALE: NONE

SHEET: 20 OF 22

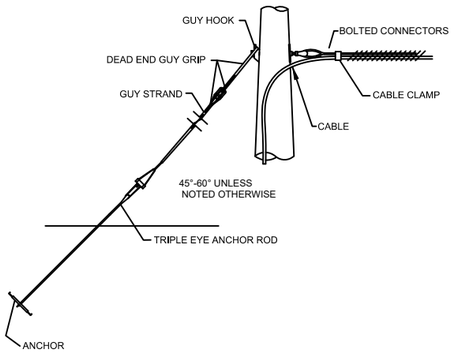

TYPICAL DEAD END DOWNGUY DETAIL
NTS

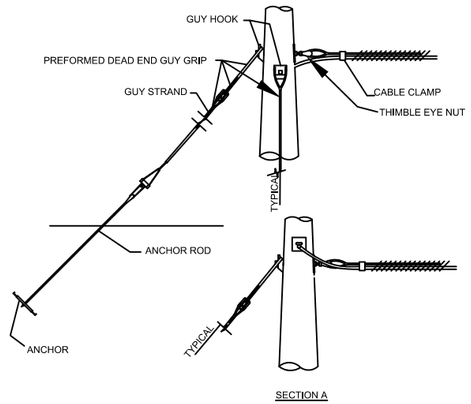

TYPICAL COMMON CORNER DOWNGUY DETAIL
NTS

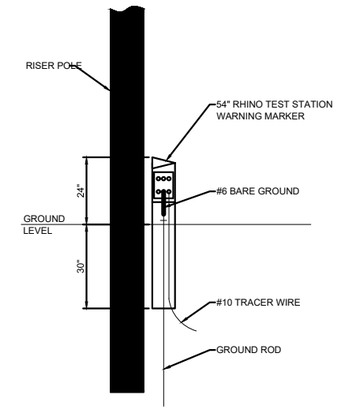

TRACER WIRE GROUNDING WITH RHINO TEST STATION
NTS

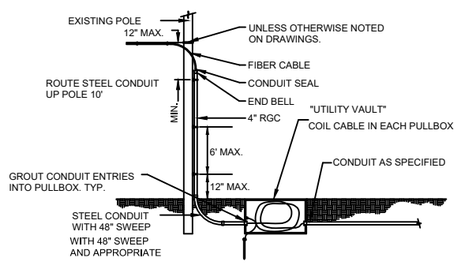

TYPICAL AERIAL TO UNDERGROUND DETAIL
NTS

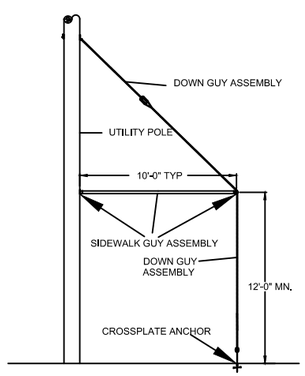

TYPICAL SIDEWALK GUY DETAIL
NTS

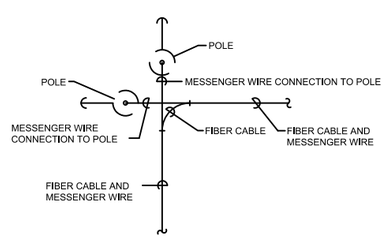

CORNER/DEAD END POLE DOWN GUY
NTS

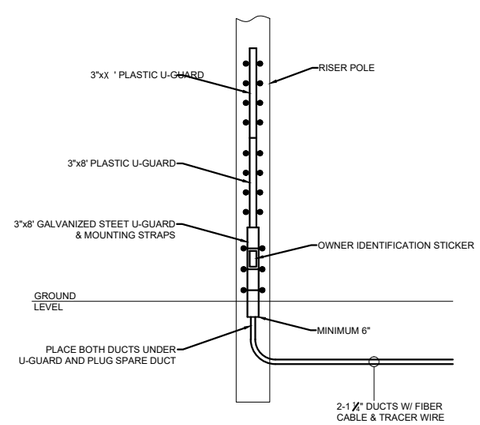

RISER GUARD INSTALLATION
NTS

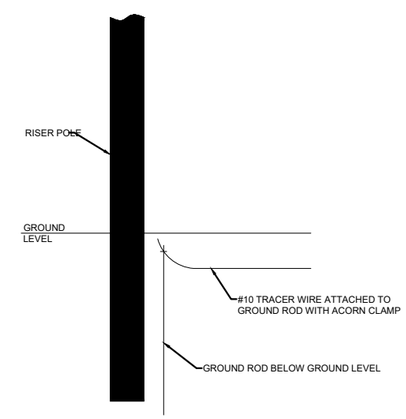

TRACER WIRE GROUNDING AT RISER POLE
NTS

ASBUILT CHANGES / REVISIONS

DATE	DESCRIPTIONS
—	—
—	—
—	—
—	—
—	—

OHIO Utilities Protection SERVICE
Call Before You Dig
1-800-362-2764
OR 8-1-1
CALL TWO WORKING DAYS BEFORE YOU DIG
(NON MEMBERS MUST BE CALLED DIRECTLY)

6040 COLLINGS DR.

DESIGNER: K. KHAY

everstream®
FASTER FIBER. BETTER BUSINESS.®

INFORMATION IN THIS DOCUMENT IS PROPRIETARY AND CONFIDENTIAL AND SHALL NOT BE USED, COPIED, REPRODUCED, OR DISCLOSED WITHOUT PRIOR WRITTEN CONSENT OF EVERSTREAM

PLANS PREPARED BY:
NEESAI CAD DESIGNS

Drawing Information: Facility locations are general in nature and are only intended for approximate location reference. Neesai CAD Deisgns will not be held liable for the accuracy and will not assume responsibility for any damages resulting from these drawings.

LEGEND

E/P	= EX. EDGE OF PAVEMENT	OHF	= PROP. OVERHEAD FIBER		PROPOSED ANCHOR & GUY		PROPOSED HANDHOLE
C/L	= EX. CENTER LINE	B	= PROP. BURIED FIBER		FOREIGN/EXISTING ANCHOR & GUY		EXISTING HANDHOLE
R/W	= EX. RIGHT OF WAY	P/L	= EX. PROPERTY LINE		AERIAL STORAGE LOOP		STORM DRAIN
					BURIED STORAGE LOOP		FIRE HYDRANT

SCALE: NONE

SHEET: 21 OF 22

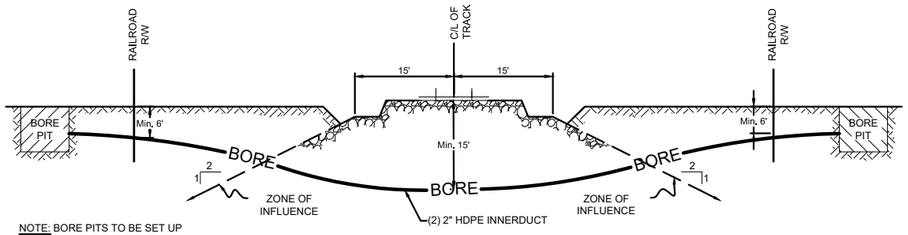

NOTE: BORE PITS TO BE SET UP OUTSIDE RAILROAD RIGHT OF WAY.

RAILROAD CROSSING DETAIL
NTS

***CONTRACTOR MUST REFERENCE AND INSTALL DUCT PER APPROVED RAILROAD PERMIT PLAN AND PROFILE AT RAILROAD ENCROACHMENT CROSSING.**

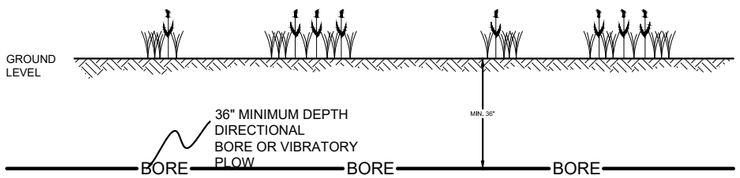

TYPICAL WETLAND CROSSING
NTS

NOTE: BORE PITS TO BE SET UP OUTSIDE OF WETLAND BOUNDARIES UNLESS OTHERWISE NOTED ON PRINTS.

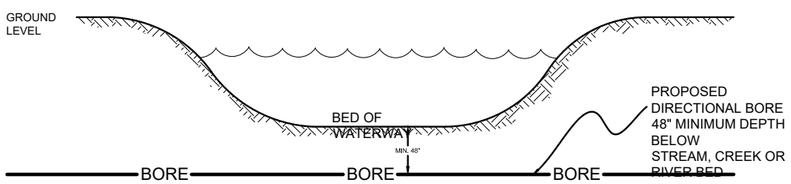

TYPICAL WATERWAY CROSSING
NTS

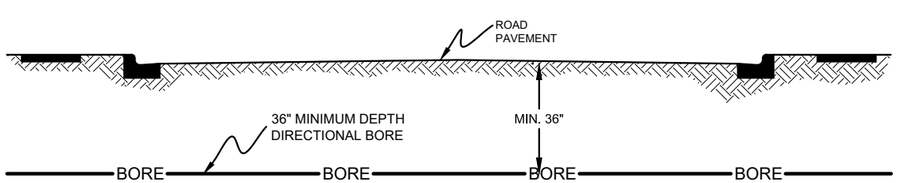

TYPICAL ROADWAY CROSSING
NTS

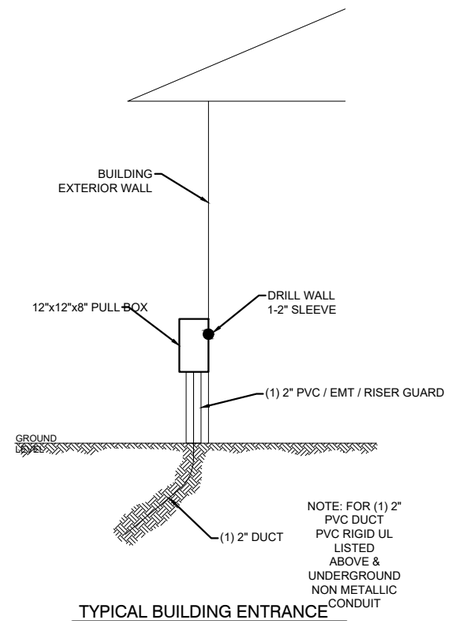

TYPICAL BUILDING ENTRANCE
NTS

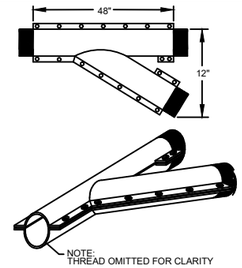

SPLIT BSP FLANGED WYE
NTS

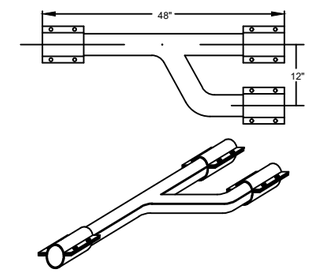

SPLIT BSP BRANCH WYE W/ COUPLINGS
NTS

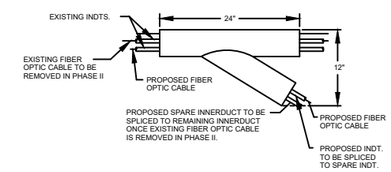

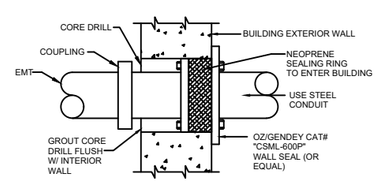

CONDUIT SEAL DETAIL
NTS

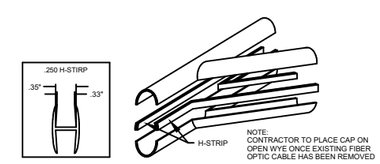

SPLIT PVC BRANCH WYE W/ H-STRIP
NTS

ASBUILT CHANGES / REVISIONS

DATE	DESCRIPTIONS
—	—
—	—
—	—
—	—
—	—

OHIO Utilities Protection SERVICE
Call Before You Dig
1-800-362-2764
OR 8-1-1
CALL TWO WORKING DAYS BEFORE YOU DIG (NON MEMBERS MUST BE CALLED DIRECTLY)

6040 COLLINGS DR.

DESIGNER: K. KHAY

everstream®
FASTER FIBER. BETTER BUSINESS.®

INFORMATION IN THIS DOCUMENT IS PROPRIETARY AND CONFIDENTIAL AND SHALL NOT BE USED, COPIED, REPRODUCED, OR DISCLOSED WITHOUT PRIOR WRITTEN CONSENT OF EVERSTREAM

PLANS PREPARED BY:
NEESAI CAD DESIGNS

Drawing Information: Facility locations are general in nature and are only intended for approximate location reference. Neesai CAD Deisgns will not be held liable for the accuracy and will not assume responsibility for any damages resulting from these drawings.

LEGEND

E/P = EX. EDGE OF PAVEMENT		OHF = PROP. OVERHEAD FIBER	
C/L = EX. CENTER LINE		B = PROP. BURIED FIBER	
R/W = EX. RIGHT OF WAY		P/L = EX. PROPERTY LINE	
PROPOSED ANCHOR & GUY		PROPOSED HANDHOLE	
FOREIGN/EXISTING ANCHOR & GUY		EXISTING HANDHOLE	
AERIAL STORAGE LOOP		STORM DRAIN	
BURIED STORAGE LOOP		FIRE HYDRANT	

SCALE: NONE

SHEET: 22 OF 22